CATALOG C-BV-0812

NIBCO®

AHEAD OF THE FLOW®

Ball Valves

Business-to-Business Solutions

Look to NIBCO for technology leadership.

The velocity with which e-business evolves demands that new products and services be continuously developed and introduced to keep our customers at the center of our business efforts. NIBCO provides an entire suite of business-to-business solutions that is changing the way we interact with customers.

NIBCOpartner.com[sm] is an exclusive set of secure web applications that allow quick access to customer-specific information and online order processing. This self-service approach gives you 24/7 access to your order status putting you in total control of your business.

NIBCOPartner.com

Real time information includes:

- Online order entry
- Viewable invoices & reports
- Inventory availability
- Current price checks
- Order status
- Online library of price sheets, catalogs & submittals

Electronic Data Interchange (EDI) makes it possible to trade business documents at the speed of light. This technology cuts the cost of each transaction by eliminating the manual labor and paperwork involved in traditional order taking. This amounts to cost-savings, increased accuracy and better use of resources.

With EDI, you can trade:

- Purchase orders
- PO Acknowledgements
- Invoices
- Product activity data
- Advanced ship notices
- Remittance advice

Vendor Managed Inventory (VMI), a sophisticated service for automated inventory management, reduces your overhead by transferring inventory management, order entry and forecasting to NIBCO. This is an on-going, interactive partnership with NIBCO.

Through automation, VMI brings results:

- Improves customer service
- Optimum inventory efficiencies
- Better forecasting
- Cuts transaction costs
- Peace of mind
- Relief from day-to-day management

NIBCO INC. WORLD HEADQUARTERS • 1516 MIDDLEBURY ST. • ELKHART, IN 46516-4740 • USA • PH: 1.800.234.0227
TECH SERVICES PH:1.888.446.4226 • FAX: 1.888.336.4226 • INTERNATIONAL OFFICE PH: +1.574.295.3327 • FAX: +1.574.295.3455
www.nibco.com

ISO 9001 BUREAU VERITAS Certification

Table of Contents

Visit our website for the most current information.

	Page
Contents	**3**
Bronze Ball Valves	**4-42**
Figure Number Key	4
Illustrated Index 1 and 2-Pc. Ball Valves	5
Illustrated Index 3-Pc. Ball Valves	6
T-560-BR-R-20/Y-20	7
T-560-BR-R-66/Y-66	8
T/S-580-70	9
T/S-580-70-66	10
T/S-585-70	11
T/S-585-70-66	12
TS/ST-585-70	13
MTT-585-70	14
T-585-70-CP	15
T/S-585-70-HC w/Hose Cap and Chain	16
T/S-585-70-66-HC w/Hose Cap and Chain	17
T/S-585-70-SU w/Single Union	18
TS/ST-585-70-SU w/Single Union	19
T-585-70-66-ST 250# Steam Rated	20
T-585/580-70-SV w/Safety Vent	21
T-585/580-70-UL	22
TM-585-70-66 w/ Mounting Pads	23
T/S-585-70-W3 Three-Way Valve	24
T/S-585-70-66-W3 Three-Way Valve	25
T/S-590-Y	26
T/S-590-Y-66	27
T-590-Y-UL	28
G-590-Y	29
G-590-Y-66	30
T/S-595-Y	31
T-595-Y-SS	32
T/S-595-Y-66	33
T-595-Y-66-SS	34
TS-595-Y	35
G-595-Y	36
G-595-Y-66	37
T-595-Y-UL	38
CS-595-Y-X/EC	39
CS-595-Y-X-66/EC	40
Pressure/Temperature Ratings	41
Carbon Steel Ball Valves (Thd, SW, BW)	**42-56**
Figure Number Key	42
Illustrated Index 1, 2 and 3-Pc. Ball Valves	43
T-560-CS-R-25-LL	44
T-560-CS-R-25-FS-LL	45
T-560-CS-R-66-LL	46
T-560-CS-R-66-FS-LL	47
T-570-CS-R-25	48
T-570-CS-R-66	49
TC-580-CS-R-25-LL	50
TC-580-CS-R-66-LL	51
T-580-CS-R-25	52
T-580-CS-R-66	53
TM/KM/BM-590-CS-R-66-FS-LL	54
T/K-595-CS-R-66-LL	55
TM/KM-595-CS-R-66	56

	Page
Stainless Steel Ball Valves (Thd, SW, BW)	**57-67**
Figure Number Key	57
Illustrated Index 1, 2 and 3-Pc. Ball Valves	58
T-560-S6-R-66-LL	59
T-560-S6-R-66-FS-LL	60
T-580-S6-R-66-LL	61
T-585-S6-R-66-LL	62
TM/KM/BM-590-S6-R-66-FS-LL	63
T/K-595-S6-R-66-LL	64
TM/KM-595-S6-R-66	65
Pressure/Temperature Ratings	66-67
Carbon Flanged Ball Valves	**68-75**
Figure Number Key	68
Illustrated Index Flanged Ball Valves	69
Flanged Detail of Unibody Design	70
Flanged Detail of Split-Body Design	71
F-510-CS-R-66-FS	72
F-530-CS-R-66-FS	73
F-515-CS-F-66-FS	74
F-535-CS-F-66-FS	75
Stainless Flanged Ball Valves	**76-81**
Illustrated Index Flanged Ball Valves	76
F-510-S6-R-66-FS	77
F-530-S6-R-66-FS	78
F-515-S6-F-66-FS	79
F-535-S6-F-66-FS	80
Pressure/Temperature Ratings	81
Options and Accessories	**82-90**
Options and Accessories Index	82
Bronze Ball Valves Options and Accessories	83
NIB-SEAL® Technical Data	84
Bronze Ball Valves Options and Accessories (continued)	85
CS/SS Ball Valves Options and Accessories	86
CS/SS Flanged Ball Valves Options and Accessories	87
Quick Reference for Ball Valve Options	88
Seat Materials – PTFE and 15% RPTFE	89
Seat Materials – 25% RPTFE, Carbon PTFE and Nylon	90
System Control Products	**91-102**
System Control Products Index	91
Ball Valve Actuation and Control	92
Circuit Balancing Valves	93
Ball Valve Actuation Data Sheet	94
TM/585-70-66-AP w/Pneumatic Actuator	95
TM-585-CV w/Reduced Orifice Ball	96
Torque Charts for Ball Valves	97-98
Two-Piece and Three-Way Actuator Mounting Data Bronze T-585-WS and TM/AT-5858	99
Two-Piece Actuator Mounting Data CS/SS T/TC-580 Series	100
Three-Piece Actuator Mounting Data Bronze 590/595 Series	101
Three-Piece Actuator Mounting Data CS/SS TM/KM-595 Series	102
Engineering Data	**103-114**
Engineering Data Index	103
Ball Valve Specifications	104
Temperature Limits of Material	105
Flow Data	106-107
Valve Properties Bronze, Brass, Copper and Iron	108-109
Valve Properties Steel, SS and Alloys	110-111
Valve Installation Tips	112
Figure Number Comparisons	113
Valve Warranty	114

Bronze Ball Valves

One, Two, and Three-Piece Body
Threaded, Solder and Grooved Ends

Bronze Ball Valve Figure Number Key

T-560-BR-R-20-**

End Connection	Valve Style	Basic Material	Seat Material	Trim Material	Options
BM - Butt Weld ISO Mount	560 - One-Piece Body Reduced Port 600 PSI	*BR - Bronze	R - Reinforced	20 - Bronze	BSP - British Standard Thread (Parallel)
G - Grooved	580 - Two-Piece Conventional Port 400 PSI		Y - Virgin PTFE	66 - Stainless Steel	BST - British Thread (Taper)
GM - Grooved ISO Mount	580-70 - Two-Piece Conventional Port 600 PSI			**70 - Bronze/Chrome Plated Ball	CP - Chrome Plated
KM - Socket Weld ISO Mount	585-70 - Two-Piece Full Port 600 PSI				EL - Extended Lever
MTT - Male x Female Thread	585-CV - Two-Piece with a Flow Control Port				HC - Hose Cap and Chain
S - Solder	590 - Three-Piece Body Conventional Port 600 PSI				HCL - Horizontal Chain Lever
ST - Solder x Thread	595 - Three-Piece Body Full Port 600 PSI				IC - Integral Check
T - Thread					LL - Locking Lever
TC - Thread (investment cast carbon body)					M - Memory Stop
TM - Thread ISO Mount					NS - NIB-SEAL® Handle
TS - Thread x Solder					OL - Oval Locking
					OV - Oval Handle
					RH - Round Handle
					SS - Stainless Steel Externals
					ST - Steam Service
					SU - Single Union End
					SV - Safety Vent
					UL - UL Listed
					VCL - Vertical Chain Lever
					W3 - Three-Way Valve
					WH - Wing Handle
					X - Oxygen Cleaned

*** BR only applies to T-560 line.**

**** 70 only applies to T or S-580-70 and T or S-585-70 series valves.**

This key is a guide only and is not intended to infer that every valve combination will be produced.
Key for threaded, socket weld, grooved end ball valves.

Dezincification Resistant

De-alloying corrosion, known as "Dezincification," was effectively eradicated from valve products in the 1950s. Today, however, this problem has returned with the increased use of high-zinc alloys (commonly referred to as 'Yellow Brass') in forged and cast valves typically produced outside the United States.

Dezincification selectively removes zinc from the alloy, leaving behind a porous, copper-rich structure that has little mechanical strength. The physical attributes of an in-service valve with Dezincification includes a white powdery substance or mineral stains on its exterior surface.

What's the cure? On all bronze valves the metal components in the waterway must not contain more than 15% zinc in their chemical makeup. As a standard NIBCO® bronze ball valves are made to be "Dezincification Resistant," which is a seal of quality and longevity.

NIBCO INC. WORLD HEADQUARTERS • 1516 MIDDLEBURY ST. • ELKHART, IN 46516-4740 • USA • PH: 1.800.234.0227
TECH SERVICES PH: 1.888.446.4226 • FAX: 1.888.336.4226 • INTERNATIONAL OFFICE PH: +1.574.295.3327 • FAX: +1.574.295.3455
www.nibco.com

One-Piece and Two-Piece Bronze Ball Valves Illustrated Index

One-Piece Bronze Ball Valve
Up to 600 lb. CWP

T-560-BR-20/T-560-BR-66
Sizes ¼" thru 2"
Threaded Ends
Page 7, 8

Two-Piece Bronze Ball Valve
600 lb. CWP

T or S-580-70/T or S-580-70-66
Sizes 1¼" thru 3"
T or S-585-70/T or S-585-70-66
Sizes ¼" thru 2"
Threaded or Solder Ends • Other End Connections
Page 9-15

Two-Piece Bronze Hose End Ball Valve
600 lb. CWP

T or S-585-70-HC/T or S-585-70-66-HC
Sizes ½" thru ¾"
Threaded or Solder Ends
Page 16, 17

Two-Piece Bronze Single Union Ball Valve
600 lb. CWP

T or S-585-70-SU
Sizes ½" thru 2"
Threaded or Solder Ends
Page 18, 19

Two-Piece Bronze 250 Steam Ball Valve
250 lb. SWP
600 lb. CWP

T-585-70-66-ST
Sizes ½" thru 2"
Threaded Ends
Page 20

Two-Piece Safety Vent Bronze Ball Valve
600 lb. CWP

T-580-70-SV
Sizes 1¼" thru 2"
T-585-70-SV
Sizes ¼" thru 1"
Threaded Ends
Page 21

Two-Piece UL/LP Gas Bronze Ball Valve
250 lb. CWP

T-580-70-UL
Sizes 1¼" thru 3"
T-585-70-UL
Sizes ¼" thru 1"
Threaded Ends
Page 22

Two-Piece Act. Mount Bronze Ball Valve
600 lb. CWP

TM-585-70-66
Sizes ½" thru 2½"
Threaded Ends
Page 23

Bronze 3-Way Ball Valve
400 lb. CWP

T-585-70-W3
Sizes 1¼" thru 2"
T or S-585-70-W3
Sizes ½" thru 1"
Threaded or Solder Ends
Page 24, 25

Three-Piece Bronze Ball Valve Illustrated Index

Dezincification Resistant

Three-Piece Bronze Ball Valve
600 lb. CWP

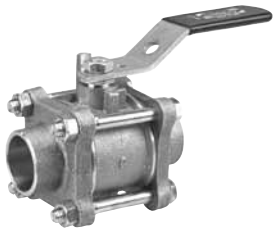

T or S-590-Y/T or S-590-Y-66
Sizes ¼" thru 3"
Threaded or Solder Ends
Page 26, 27

Three-Piece Bronze Ball Valve
600 lb. CWP
175 PSI LP Gas

T-590-Y-UL
Sizes ¼" thru 3"
Threaded Ends
Page 28

Three-Piece Bronze Ball Valve
600 lb. CWP

G-590-Y/G-590-Y-66
Sizes 1½" thru 3"
Grooved Ends
Page 29, 30

Three-Piece Bronze Ball Valve
600 lb. CWP

T or S-595-Y/T-595-Y-SS/T or S-595-Y-66/ T-595-Y-66-SS
Sizes ¼" thru 2½"
Threaded or Solder Ends
Page 31-34

Three-Piece Bronze Ball Valve
600 lb. CWP

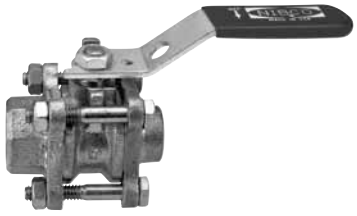

TS-595-Y
Sizes ¼" thru 2"
Threaded x Solder Ends
Page 35

Three-Piece Bronze Ball Valve
600 lb. CWP

G-595-Y/G-595-Y-66
Sizes 1½" thru 2½"
Grooved Ends
Page 36, 37

Three-Piece Bronze Ball Valve
600 lb. CWP
175 PSI LP Gas

T-595-Y-UL
Sizes ¼" thru 2"
Threaded Ends
Page 38

Three-Piece Bronze Ball Valve
200 lb. PSI Medical Gas

CS-595-YX/CS-595-YX-66/EC
Sizes ½" thru 2"
Solder Ends
Page 39, 40

Pressure Temperature Chart

Page 41

NIBCO INC. WORLD HEADQUARTERS • 1516 MIDDLEBURY ST. • ELKHART, IN 46516-4740 • USA • PH: 1.800.234.0227
TECH SERVICES PH: 1.888.446.4226 • FAX: 1.888.336.4226 • INTERNATIONAL OFFICE PH: +1.574.295.3327 • FAX: +1.574.295.3455
www.nibco.com

Bronze Ball Valves

One-Piece Body • Reduced Port • Bronze Trim • Blowout-Proof Stem

Dezincification Resistant

600 PSI/41.4 Bar Non-Shock Cold Working Pressure◆

CONFORMS TO MSS SP-110

MATERIAL LIST

	PART	SPECIFICATION
1.	Handle Nut	Zinc Plated Steel
2.	Identification Plate	Aluminum
3.	Handle	Zinc Plated Steel Clear Chromate Plastisol Coated
4.	[1]Packing Nut	Stainless Steel
5.	Belleville Washer	Zinc Plated Steel
6.	Travel Stop	Zinc Dichromate Plated Steel
7.	Pack Gland	Brass ASTM B 16 Alloy C36000
8.	Packing	Reinforced PTFE
9.	Grounding Washer	Stainless Steel ASTM A 167 Type 304
10.	Thrust Washer	Reinforced PTFE
11.	Stem	Bronze ASTM B 371 Alloy C69430
12.	Ball	Brass ASTM B 124 Alloy C37700 or ASTM B 16 Alloy C36000
13.	Seat Ring (2)	*PTFE (Y) or Reinforced PTFE (R)
14.	Body Insert	Bronze ASTM B 584 Alloy C84400
15.	Body	Bronze ASTM B 584 Alloy C84400
16.	Body End Piece	Brass ASTM B 16 Alloy C36000 (not shown) ¼ and ⅜ size only

[1] ¼"-¾" ASTM A 582 Type 416. 1"-2" 300 Series.

T-560-BR-∗-20
Threaded

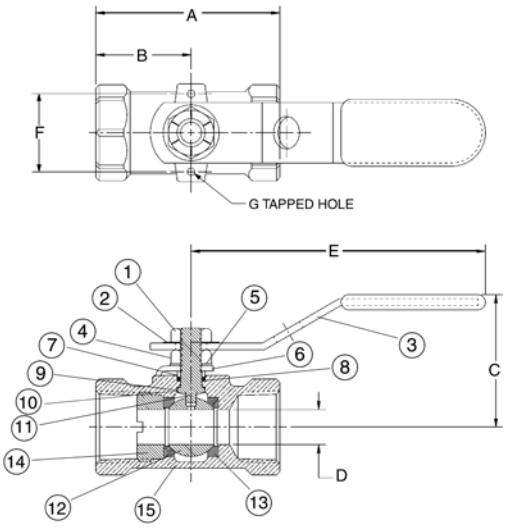

T-560-BR-∗-20
NPT x NPT

DIMENSIONS—WEIGHTS—QUANTITIES

Size		Dimensions A		B		C		D		E		F		G	T-560-BR-∗-20		Master
In.	mm.	In.	mm.	In.	mm.	In.	mm.	In.	mm.	In.	mm.	In.	mm.	In.	Lbs.	Kg.	Ctn. Qty.
¼	8	2.63	67	1.34	34	1.63	41	.38	10	4.00	102	1.22	31	10-24	.66	.30	50
⅜	10	2.63	67	1.34	34	1.63	41	.38	10	4.00	102	1.22	31	10-24	.63	.28	50
½	15	2.63	67	1.34	34	1.63	41	.38	10	4.00	102	1.22	31	10-24	.59	.27	50
¾	20	2.88	73	1.50	38	1.71	43	.50	13	4.00	102	1.22	31	10-24	.82	.37	50
1	25	3.31	84	1.71	43	2.00	51	.63	16	4.69	119	1.34	34	¼-20	1.36	.62	40
1 ¼	32	3.84	98	1.97	50	2.06	52	.81	21	4.69	119	1.50	38	¼-20	2.01	.91	20
1 ½	40	4.03	102	2.03	52	2.56	65	1.00	25	6.75	171	1.63	41	¼-20	2.75	1.25	20
2	50	4.59	117	2.28	58	2.75	70	1.25	32	6.75	171	2.06	52	¼-20	4.16	1.89	10

Note: G Holes are only tapped for actuated valves.

◆For detailed Operating Pressure, refer to Pressure Temperature Chart on page 41.

Bronze Ball Valves

Dezincification Resistant

One-Piece Body • Reduced Port • Stainless Trim • Vented Ball • Blowout-Proof Stem

600 PSI/41.4 Bar Non-Shock Cold Working Pressure◆

CONFORMS TO MSS SP-110

MATERIAL LIST

	PART	SPECIFICATION
1.	Handle Nut	Stainless Steel 300 Series
2.	Identification Plate	Aluminum
3.	Handle	Zinc Plated Steel Clear Chromate Plastisol Coated
4.	[1]Packing Nut	Stainless Steel
5.	Belleville Washer	Zinc Plated Steel
6.	Travel Stop	Zinc Dichromate Plated Steel
7.	Pack Gland	Stainless Steel ASTM A 167 Type 316
8.	Packing	Reinforced PTFE
9.	Grounding Washer	Stainless Steel ASTM A 240 Type 304
10.	Thrust Washer	Reinforced PTFE
11.	Stem	Stainless Steel ASTM A 276 Type 316
12.	Ball (Vented)	Stainless Steel ASTM A 276 Type 316 or ASTM A 351 Type CF8M
13.	Seat Ring (2)	*PTFE (Y) or Reinforced PTFE (R)
14.	Body Insert	Bronze ASTM B 584 Alloy C84400
15.	Body	Bronze ASTM B 584 Alloy C84400
16.	Body End Piece	Brass ASTM B 16 Alloy C36000 (not shown) ¼ and ⅜ size only

[1] ¼"-¾" ASTM A 582 Type 416. 1"-2" 300 Series.

T-560-BR-∗-66
Threaded

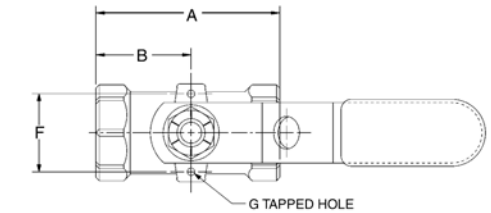

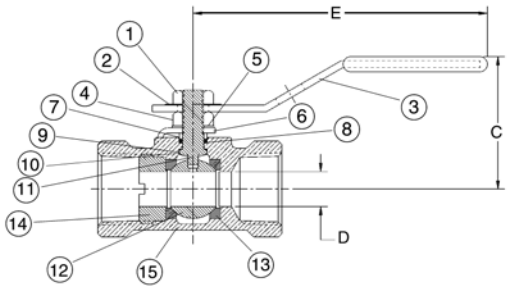

T-560-BR-∗-66
NPT x NPT

DIMENSIONS—WEIGHTS—QUANTITIES

Size		Dimensions A		B		C		D		E		F		G	T-560-BR-∗-66		Master
In.	mm.	In.	mm.	In.	mm.	In.	mm.	In.	mm.	In.	mm.	In.	mm.	In.	Lbs.	Kg.	Ctn. Qty.
¼	8	2.63	67	1.34	34	1.63	41	.38	10	4.00	102	1.22	31	10-24	.66	.30	50
⅜	10	2.63	67	1.34	34	1.63	41	.38	10	4.00	102	1.22	31	10-24	.63	.29	50
½	15	2.63	67	1.34	34	1.63	41	.38	10	4.00	102	1.22	31	10-24	.59	.27	50
¾	20	2.88	73	1.50	38	1.71	43	.50	13	4.00	102	1.22	31	10-24	.82	.37	50
1	25	3.31	84	1.71	43	2.00	51	.63	16	4.69	119	1.34	34	¼-20	1.36	.62	40
1 ¼	32	3.84	98	1.97	50	2.06	52	.81	21	4.69	119	1.50	38	¼-20	2.01	.91	20
1 ½	40	4.03	102	2.03	52	2.56	65	1.00	25	6.75	171	1.63	41	¼-20	2.75	1.25	20
2	50	4.59	117	2.28	58	2.75	70	1.25	32	6.75	171	2.06	52	¼-20	4.16	1.89	10

Note: G Holes are only tapped for actuated valves.

◆For detailed Operating Pressure, refer to Pressure Temperature Chart on page 41.

NIBCO INC. WORLD HEADQUARTERS • 1516 MIDDLEBURY ST. • ELKHART, IN 46516-4740 • USA • PH: 1.800.234.0227
TECH SERVICES PH: 1.888.446.4226 • FAX: 1.888.336.4226 • INTERNATIONAL OFFICE PH: +1.574.295.3327 • FAX: +1.574.295.3455
www.nibco.com

Bronze Ball Valves

Dezincification Resistant

Two-Piece Body • Full Port ¼"-1" • Conventional Port 1¼"-3" • Bronze Trim • Blowout-Proof Stem

600 PSI/41.4 Bar Non-Shock Cold Working Pressure
150 PSI/10.3 Bar Saturated Steam◆

T-580-70
Threaded

S-580-70
Solder

CONFORMS TO MSS SP-110

MATERIAL LIST

	PART	SPECIFICATION
1.	Handle Nut	Zinc Plated Steel
2.	Handle	Zinc Plated Steel Clear Chromate Plastisol Coated
3.	Threaded Pack Gland	Brass ASTM B 16 Alloy C36000
4.	Packing	PTFE
5.	Stem	Silicon Bronze ASTM B 371 Alloy C69430 or ASTM B 99 Alloy C65100
6.	Thrust Washer	Reinforced PTFE
7.	Ball	Brass ASTM B 124 Alloy C37700 or ASTM B16 Alloy C36000 EACH with Hard Chrome Plate
8.	Seat Ring (2)	Reinforced PTFE
9.	Body	Cast Red Bronze ASTM B 584 Alloy C84400
10.	Body End Piece	Cast Red Bronze ASTM B 584 Alloy C84400

¼" size only has a 304 stainless steel grounding washer.

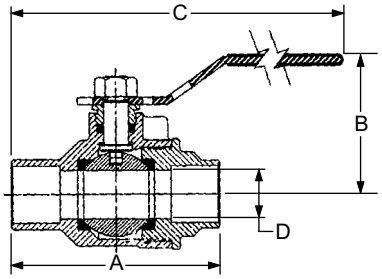

S-580-70
C x C

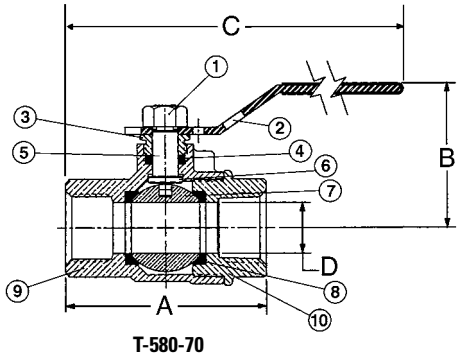

T-580-70
NPT x NPT

DIMENSIONS—WEIGHTS—QUANTITIES

Size		Dimensions T-580-70 A		Dimensions S-580-70 A		Dimensions B		Dimensions T-580-70 C		Dimensions S-580-70 C		Dimensions D		T-580-70		S-580-70		Master
In.	mm.	In.	mm.	In.	mm.	In.	mm.	In.	mm.	In.	mm.	In.	mm.	Lbs.	Kg.	Lbs.	Kg.	Ctn. Qty.
† ¼	8	2.00	51	1.75	44	1.75	44	5.00	127	4.75	121	.38	10	.45	.21	.42	.19	100
† ⅜	10	2.00	51	1.84	47	1.75	44	5.00	127	4.81	122	.38	10	.45	.21	.42	.19	100
† ½	15	2.44	62	2.56	65	1.88	48	5.19	132	5.25	133	.50	13	.64	.29	.60	.27	100
† ¾	20	2.94	75	3.25	83	2.25	57	6.25	159	6.25	159	.75	19	1.33	.60	1.27	.58	50
†1	25	3.34	85	3.75	95	2.38	60	6.44	164	6.63	168	1.00	25	1.79	.81	1.72	.78	40
1 ¼	32	3.94	100	4.00	102	2.63	67	6.75	171	6.75	171	1.00	25	2.17	.98	1.78	.81	20
1 ½	40	4.31	109	4.44	113	3.00	76	8.88	226	9.00	229	1.25	32	3.27	1.48	2.87	1.30	20
2	50	4.63	118	5.50	140	3.16	80	9.06	230	9.50	241	1.50	38	5.09	2.31	4.60	2.08	10
2 ½	65	5.84	148	7.28	185	3.50	89	9.66	245	10.38	264	2.00	51	8.25	3.74	8.18	3.71	6
3	80	7.09	180	8.78	223	4.41	112	11.53	293	12.38	314	2.50	64	15.65	7.10	14.86	6.74	4

†NIBCO supplies Full Port T or S-585-70 on this size.

Note: Solder end is designed to be soft-soldered into lines using solders with the melting point not exceeding 500°F. Higher temperature solders will damage the seat material. See installation sheet packaged with valves.

◆For detailed Operating Pressure, refer to Pressure Temperature Chart on page 41.

Bronze Ball Valves

Dezincification Resistant

Two-Piece Body • Full Port ¼"-1" • Conventional Port 1¼"-3" • Stainless Trim • Blowout-Proof Stem • Vented Ball

600 PSI/41.4 Bar Non-Shock Cold Working Pressure
150 PSI/10.3 Bar Saturated Steam◆

T-580-70-66
Threaded

S-580-70-66
Solder

CONFORMS TO MSS SP-110

MATERIAL LIST

	PART	SPECIFICATION
1.	Handle Nut	Stainless Steel 300 Series
2.	Handle	Zinc Plated Steel Clear Chromate Plastisol Coated
3.	Threaded Pack Gland	Brass ASTM B 16 Alloy C36000
4.	Packing	PTFE
5.	Stem	Stainless Steel ASTM A 276 Type 316
6.	Thrust Washer	Reinforced PTFE
7.	Ball (Vented)	Stainless Steel ASTM A 276 Type 316 or ASTM A 351 Type CF8M
8.	Seat Ring (2)	Reinforced PTFE
9.	Body	Bronze ASTM B 584 Alloy C84400
10.	Body End Piece	Bronze ASTM B 584 Alloy C84400

¼" size only has a 304 stainless steel grounding washer.

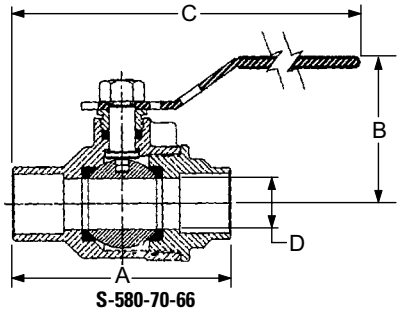

S-580-70-66
C x C

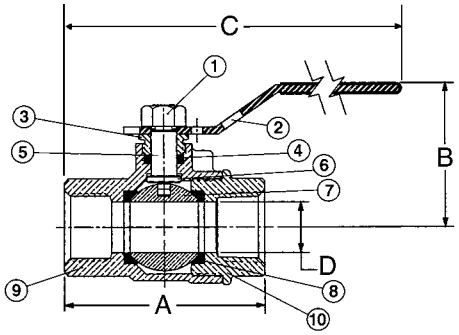

T-580-70-66
NPT x NPT

DIMENSIONS—WEIGHTS—QUANTITIES

Size		Dimensions A		A		B		C		C		D		T-580-70-66		S-580-70-66		Master
		T-580-70-66		S-580-70-66				T-580-70-66		S-580-70-66								
In.	mm.	In.	mm.	In.	mm.	In.	mm.	In.	mm.	In.	mm.	In.	mm.	Lbs.	Kg.	Lbs.	Kg.	Ctn. Qty.
†¼	8	2.00	51	1.75	44	1.75	44	5.00	127	4.75	121	.38	10	.45	.21	.42	.19	100
†⅜	10	2.00	51	1.84	47	1.75	44	5.00	127	4.81	122	.38	10	.45	.21	.42	.19	100
†½	15	2.44	62	2.56	65	1.88	48	5.19	132	5.25	133	.50	13	.64	.29	.60	.27	100
†¾	20	2.94	75	3.25	83	2.25	57	6.25	159	6.25	159	.75	19	1.33	.60	1.27	.58	50
†1	25	3.34	85	3.75	95	2.38	60	6.44	164	6.63	168	1.00	25	1.79	.81	1.72	.78	40
1¼	32	3.94	100	4.00	102	2.63	67	6.75	171	6.75	171	1.00	25	2.33	1.06	1.94	.88	20
1½	40	4.31	109	4.44	113	3.00	76	8.88	226	9.00	229	1.25	32	3.49	1.58	3.10	1.40	20
2	50	4.63	118	5.50	140	3.16	80	9.06	230	9.50	241	1.50	38	5.16	2.34	4.67	2.12	10
2½	65	5.84	148	7.28	185	3.50	89	9.66	245	10.38	264	2.00	51	8.98	4.07	8.92	4.04	6
3	80	7.09	180	8.78	223	4.41	112	11.53	293	12.38	314	2.50	64	17.38	7.88	16.59	7.52	4

† NIBCO supplies Full Port T or S-585-70-66 on this size.

Note: Solder end is designed to be soft-soldered into lines using solders with the melting point not exceeding 500°F. Higher temperature solders will damage the seat material. See installation sheet packaged with valves.

◆For detailed Operating Pressure, refer to Pressure Temperature Chart on page 41.

NIBCO INC. WORLD HEADQUARTERS • 1516 MIDDLEBURY ST. • ELKHART, IN 46516-4740 • USA • PH: 1.800.234.0227
TECH SERVICES PH: 1.888.446.4226 • FAX: 1.888.336.4226 • INTERNATIONAL OFFICE PH: +1.574.295.3327 • FAX: +1.574.295.3455
www.nibco.com

Bronze Ball Valves

Two-Piece Body • Full Port • Bronze Trim • Blowout-Proof Stem

Dezincification Resistant

600 PSI/41.4 Bar Non-Shock Cold Working Pressure
150 PSI/10.3 Bar Saturated Steam◆

T-585-70
Threaded

S-585-70
Solder

CONFORMS TO MSS SP-110

MATERIAL LIST

	PART	SPECIFICATION
1.	Handle Nut	Zinc Plated Steel
2.	Handle	Zinc Plated Steel Clear Chromate Plastisol Coated
3.	Threaded Pack Gland	Brass ASTM B 16 Alloy C36000
4.	Packing	PTFE
5.	Stem	Silicon Bronze ASTM B 371 Alloy C69300 or ASTM B 99 Alloy C65100
6.	Thrust Washer	Reinforced PTFE
7.	Ball	Brass ASTM B 124 Alloy C37700 or ASTM B16 Alloy C36000 EACH with Hard Chrome Plate
8.	Seat Ring (2)	Reinforced PTFE
9.	Body	Cast Red Bronze ASTM B 584 Alloy C84400
10.	Body End Piece	Cast Red Bronze ASTM B 584 Alloy C84400

¼" size only has a 304 stainless steel grounding washer.

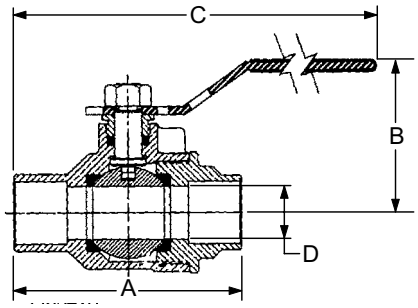

S-585-70
C x C

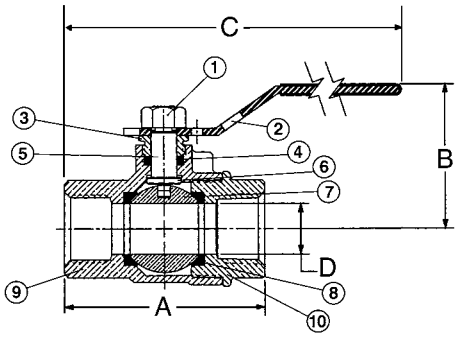

T-585-70
NPT x NPT

DIMENSIONS—WEIGHTS—QUANTITIES

Size		Dimensions T-585-70 A		Dimensions S-585-70 A		Dimensions B		Dimensions T-585-70 C		Dimensions S-585-70 C		Dimensions D		T-585-70		S-585-70		Master
In.	mm.	In.	mm.	In.	mm.	In.	mm.	In.	mm.	In.	mm.	In.	mm.	Lbs.	Kg.	Lbs.	Kg.	Ctn. Qty.
¼	8	2.00	51	1.75	44	1.75	44	5.00	127	4.75	121	.38	10	.45	.21	.42	.19	100
⅜	10	2.00	51	1.84	47	1.75	44	5.00	127	4.81	122	.38	10	.45	.21	.42	.19	100
½	15	2.44	62	2.56	65	1.88	48	5.19	132	5.25	133	.50	13	.64	.29	.60	.27	100
¾	20	2.94	75	3.25	82	2.25	57	6.25	159	6.25	159	.75	19	1.33	.60	1.27	.58	50
1	25	3.34	85	3.75	95	2.38	60	6.44	164	6.63	168	1.00	25	1.79	.81	1.72	.78	40
1 ¼	32	4.19	106	5.06	128	3.00	76	6.75	171	7.19	183	1.25	32	3.12	1.41	3.18	1.44	20
1 ½	40	4.72	120	5.99	151	3.16	80	9.06	230	9.69	246	1.50	38	4.78	2.17	5.12	2.32	10
2	50	5.16	131	6.72	170	3.50	89	9.25	235	10.06	256	2.00	51	6.68	3.03	7.10	3.22	8

Note: Solder end is designed to be soft-soldered into lines using solders with the melting point not exceeding 500°F. Higher temperature solders will damage the seat material. See installation sheet packaged with valves.

◆ **For detailed Operating Pressure, refer to Pressure Temperature Chart on page 41.**

Bronze Ball Valves

Dezincification Resistant

Two-Piece Body • Full Port • Stainless Trim • Blowout-Proof Stem • Vented Ball

600 PSI/41.4 Bar Non-Shock Cold Working Pressure
150 PSI/10.3 Bar Saturated Steam◆

T-585-70-66
Threaded

S-585-70-66
Solder

CONFORMS TO MSS SP-110

MATERIAL LIST

	PART	SPECIFICATION
1.	Handle Nut	Stainless Steel 300 Series
2.	Handle	Zinc Plated Steel Clear Chromate Plastisol Coated
3.	Threaded Pack Gland	Brass ASTM B 16 Alloy C36000
4.	Packing	PTFE
5.	Stem	Stainless Steel ASTM A 276 Type 316
6.	Thrust Washer	Reinforced PTFE
7.	Ball (Vented)	Stainless Steel ASTM A 276 Type 316 or ASTM A 351 Type CF8M
8.	Seat Ring (2)	Reinforced PTFE
9.	Body	Bronze ASTM B 584 Alloy C84400
10.	Body End Piece	Bronze ASTM B 584 Alloy C84400

¼" size only has a 304 stainless steel grounding washer.

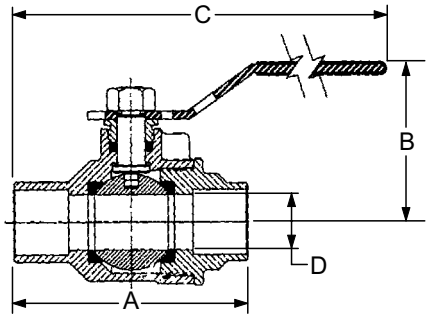

S-585-70-66
C x C

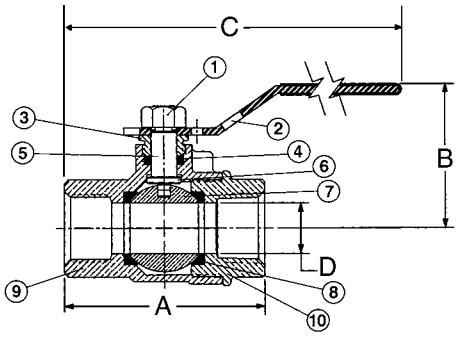

T-585-70-66
NPT x NPT

DIMENSIONS—WEIGHTS—QUANTITIES

Size		Dimensions A T-585-70-66		A S-585-70-66		B		C T-585-70-66		C S-585-70-66		D		Weights T-585-70-66		Weights S-585-70-66		Master
In.	mm.	In.	mm.	In.	mm.	In.	mm.	In.	mm.	In.	mm.	In.	mm.	Lbs.	Kg.	Lbs.	Kg.	Ctn. Qty.
¼	8	2.00	51	1.75	44	1.75	44	5.00	127	4.75	121	.38	10	.45	.21	.42	.19	100
⅜	10	2.00	51	1.84	47	1.75	44	5.00	127	4.81	122	.38	10	.45	.21	.42	.19	100
½	15	2.44	62	2.56	65	1.88	48	5.19	132	5.25	133	.50	13	.64	.29	.60	.27	100
¾	20	2.94	75	3.25	82	2.25	57	6.25	159	6.25	159	.75	19	1.33	.60	1.27	.58	50
1	25	3.34	85	3.75	95	2.38	60	6.44	164	6.63	168	1.00	25	1.79	.81	1.72	.78	40
1 ¼	32	4.19	106	5.06	128	3.00	76	6.75	171	7.19	183	1.25	32	3.34	1.52	3.40	1.55	20
1 ½	40	4.72	120	5.99	151	3.16	80	9.06	230	9.69	246	1.50	38	4.84	2.20	5.18	2.35	10
2	50	5.16	131	6.72	170	3.50	89	9.25	235	10.06	256	2.00	51	7.41	3.37	7.83	3.56	8

Note: Solder end is designed to be soft-soldered into lines using solders with the melting point not exceeding 500°F. Higher temperature solders will damage the seat material. See installation sheet packaged with valves.

◆ For detailed Operating Pressure, refer to Pressure Temperature Chart on page 41.

NIBCO INC. WORLD HEADQUARTERS • 1516 MIDDLEBURY ST. • ELKHART, IN 46516-4740 • USA • PH: 1.800.234.0227
TECH SERVICES PH: 1.888.446.4226 • FAX: 1.888.336.4226 • INTERNATIONAL OFFICE PH: +1.574.295.3327 • FAX: +1.574.295.3455
www.nibco.com

Bronze Ball Valves

Dezincification Resistant

Two-Piece Body • Full Port • Bronze Trim • Thread x Solder (TS) or Solder x Thread End (ST) • Blowout-Proof Stem

600 PSI/41.4 Bar Non-Shock Cold Working Pressure
150 PSI/10.3 Bar Saturated Steam◆

TS-585-70
Threaded x Solder

ST-585-70
Solder x Threaded

CONFORMS TO MSS SP-110

MATERIAL LIST

	PART	SPECIFICATION
1.	Handle Nut	Zinc Plated Steel
2.	Handle	Zinc Plated Steel Clear Chromate Plastisol Coated
3.	Threaded Pack Gland	Brass ASTM B 16 Alloy C36000
4.	Packing	PTFE
5.	Stem	Silicon Bronze ASTM B 371 Alloy C69300 or ASTM B99 Alloy C65100
6.	Thrust Washer	Reinforced PTFE
7.	Ball	Brass ASTM B 124 Alloy C37700 or ASTM B16 Alloy C36000 EACH with Hard Chrome Plate
8.	Seat Ring (2)	Reinforced PTFE
9.	Body	Bronze ASTM B 584 Alloy C84400
10.	Body End Piece	Bronze ASTM B 584 Alloy C84400

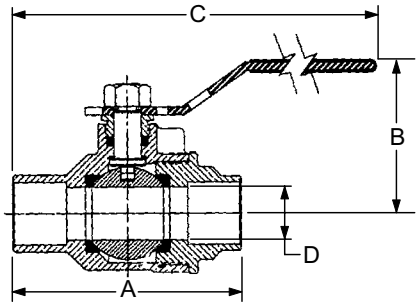

ST-585-70
NPT x C

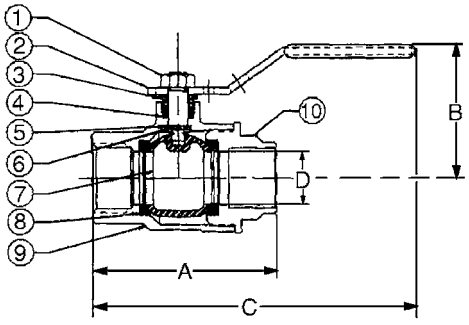

TS-585-70
NPT x C

DIMENSIONS—WEIGHTS—QUANTITIES

Size		Dimensions TS-585-70 A		ST-585-70 A		B		TS-585-70 C		ST-585-70 C		D		TS-585-70		ST-585-70		Master
In.	mm.	In.	mm.	In.	mm.	In.	mm.	In.	mm.	In.	mm.	In.	mm.	Lbs.	Kg.	Lbs.	Kg.	Ctn. Qty.
½	15	2.55	65	2.40	61	1.88	48	5.19	132	5.25	133	.50	13	.71	.32	.62	.28	100
¾	20	3.06	78	3.09	78	2.25	57	6.25	159	6.25	159	.75	19	1.31	.60	1.29	.59	50
1	25	3.53	90	3.53	90	2.38	60	6.44	164	6.63	168	1.00	25	2.36	1.07	2.35	1.07	40
1¼	32	4.61	117	4.63	118	3.00	76	6.75	171	7.19	183	1.25	32	3.11	1.41	3.18	1.44	20
1½	40	5.32	135	5.32	135	3.16	80	9.06	230	9.69	246	1.50	38	4.82	2.18	5.07	2.30	10
2	50	5.93	151	5.93	151	3.50	89	9.25	235	10.06	256	2.00	51	6.59	2.99	6.34	2.87	8

Note: Solder end is designed to be soft-soldered into lines using solders with the melting point not exceeding 500°F. Higher temperature solders will damage the seat material. See installation sheet packaged with valves.

◆ For detailed Operating Pressure, refer to Pressure Temperature Chart on page 41.

Bronze Ball Valves

Two-Piece Body • Full Port • Bronze Trim • Male x Female Thread Ends • Blowout-Proof Stem

600 PSI/41.4 Bar Non-Shock Cold Working Pressure
150 PSI/10.3 Bar Saturated Steam◆

CONFORMS TO MSS SP-110

MATERIAL LIST

	PART	SPECIFICATION
1.	Handle Nut	Zinc Plated Steel
2.	Handle	Zinc Plated Steel Clear Chromate Plastisol Coated
3.	Threaded Pack Gland	Brass ASTM B 16 Alloy C36000
4.	Packing	PTFE
5.	Thrust Washer	Reinforced PTFE
6.	Stem	Silicon Bronze ASTM B 371 Alloy C69300 or ASTM B 99 Alloy C65100
7.	Ball	Brass ASTM B 124 Alloy C37700 or ASTM B16 Alloy C36000 EACH with Hard Chrome Plate
8.	Seat Ring (2)	Reinforced PTFE
9.	Body	Bronze ASTM B 584 Alloy C84400
10.	Male Body End	Brass ASTM B 16 Alloy C36000
11.	Cap Plug	Low Density Polyethylene

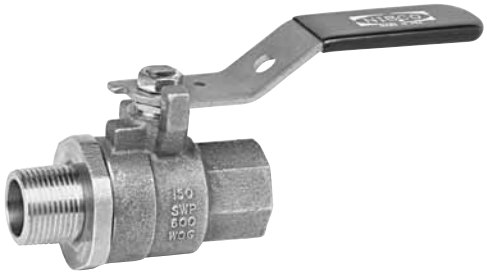

MTT-585-70
Male x Female NPT

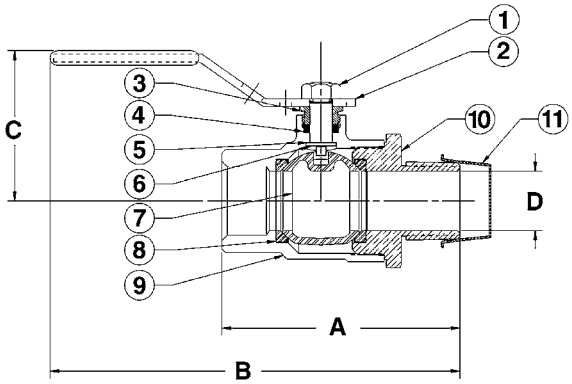

MTT-585-70
Male x Female NPT

DIMENSIONS—WEIGHTS—QUANTITIES

Size		Dimensions A		B		C		D		MTT-585-70		Master
In.	mm.	In.	mm.	In.	mm.	In.	mm.	In.	mm.	Lbs.	Kg.	Ctn. Qty.
¼	8	2.41	61	5.30	135	1.75	44	.38	10	.43	.19	40
⅜	10	2.40	61	5.30	135	1.72	44	.38	10	.52	.24	40
½	15	2.80	71	5.50	140	1.88	48	.50	13	.78	.35	40
¾	20	3.40	86	6.59	167	2.25	57	.75	19	1.54	.70	20
1	25	4.00	102	6.99	178	2.38	60	1.00	25	2.71	1.23	20
1 ¼	32	4.58	116	9.18	233	3.00	76	1.25	32	3.56	1.62	10
1 ½	40	5.20	132	9.53	242	3.16	80	1.50	38	5.34	2.42	6
2	50	5.49	139	9.61	244	3.50	89	2.00	51	6.83	3.10	4

◆ **For detailed Operating Pressure, refer to Pressure Temperature Chart on page 41.**

NIBCO INC. WORLD HEADQUARTERS • 1516 MIDDLEBURY ST. • ELKHART, IN 46516-4740 • USA • PH: 1.800.234.0227
TECH SERVICES PH: 1.888.446.4226 • FAX: 1.888.336.4226 • INTERNATIONAL OFFICE PH: +1.574.295.3327 • FAX: +1.574.295.3455
www.nibco.com

Bronze Ball Valves

Two-Piece Body • Full Port • Bronze Trim •
Body with Chrome Plating • Blowout-Proof Stem

Dezincification Resistant

600 PSI/41.4 Bar Non-Shock Cold Working Pressure◆

T-585-70-CP
Threaded

CONFORMS TO MSS SP-110

MATERIAL LIST

	PART	SPECIFICATION
1.	Handle Nut	Zinc Plated Steel
2.	Handle	Zinc Plated Steel Clear Chromate Plastisol Coated
3.	Threaded Pack Gland	Brass ASTM B 16 Alloy C36000
4.	Packing	PTFE
5.	Stem	Silicon Bronze ASTM B 371 Alloy C69300 or ASTM B 99 Alloy C65100
6.	Thrust Washer	Reinforced PTFE
7.	Ball	Brass ASTM B 124 Alloy C37700 or ASTM B16 Alloy C36000 EACH with Hard Chrome Plate
8.	Seat Ring (2)	Reinforced PTFE
9.	Body	Chrome Plated Bronze ASTM B 584 Alloy C84400
10.	Body End Piece	Chrome Plated Bronze ASTM B 584 Alloy C84400

1/4" and 3/8" sizes have a 304 stainless steel grounding washer.

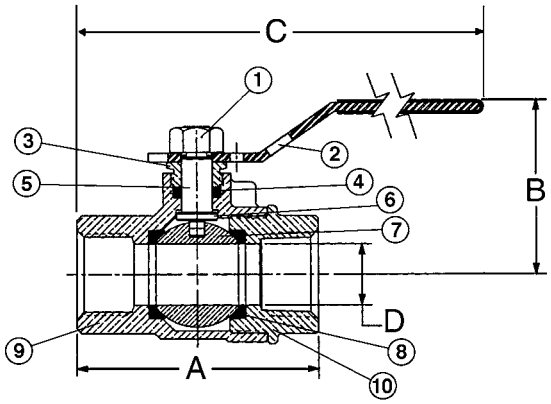

T-585-70-CP
NPT x NPT

DIMENSIONS—WEIGHTS—QUANTITIES

Size		Dimensions A		B		C		D		T-585-70-CP		Master
In.	mm.	In.	mm.	In.	mm.	In.	mm.	In.	mm.	Lbs.	Kg.	Ctn. Qty.
¼	8	2.00	51	1.75	44	5.00	127	.38	10	.45	.21	100
⅜	10	2.00	51	1.75	44	5.00	127	.38	10	.45	.20	100
½	15	2.44	62	1.88	48	5.19	132	.50	13	.64	.29	100
¾	20	2.94	75	2.25	57	6.25	159	.75	19	1.42	.64	50
1	25	3.34	85	2.38	60	6.44	164	1.00	25	1.79	.81	40
1 ¼	32	4.19	106	3.00	76	6.75	171	1.25	32	3.12	1.41	20
1 ½	40	4.72	120	3.16	80	9.06	230	1.50	38	4.78	2.17	10
2	50	5.16	131	3.50	89	9.25	235	2.00	51	6.68	3.03	8

◆ **For detailed Operating Pressure, refer to Pressure Temperature Chart on page 41.**

Bronze Ball Valves

Two-Piece Body • Full Port • Bronze Trim • ¾" Hose Connection with Cap and Chain • Blowout-Proof Stem

600 PSI/41.4 Bar Non-Shock Cold Working Pressure◆

T-585-70-HC
Threaded x Hose

S-585-70-HC
Solder x Hose

CONFORMS TO MSS SP-110

MATERIAL LIST

	PART	SPECIFICATION
1.	Handle Nut	Zinc Plated Steel
2.	Handle	Zinc Plated Steel Clear Chromate Plastisol Coated
3.	Threaded Pack Gland	Brass ASTM B 16 Alloy C36000
4.	Packing	PTFE
5.	Thrust Washer	Reinforced PTFE
6.	Stem	Silicon Bronze ASTM B 371 Alloy C69300 or ASTM B 99 Alloy C65100
7.	Ball	Brass ASTM B 124 Alloy C37700 or ASTM B16 Alloy C36000 EACH with Hard Chrome Plate
8.	Seat Ring (2)	Reinforced PTFE
9.	Body	Bronze ASTM B 584 Alloy C84400
10.	Hose Body End	ASTM B 124 Alloy C37700
11.	[1]Cap	Die Cast Brass
12.	Gasket	Rubber
13.	Chain	Brass

[1] Cap is for hose end thread protection only. Not to be used for pressure containing purposes.

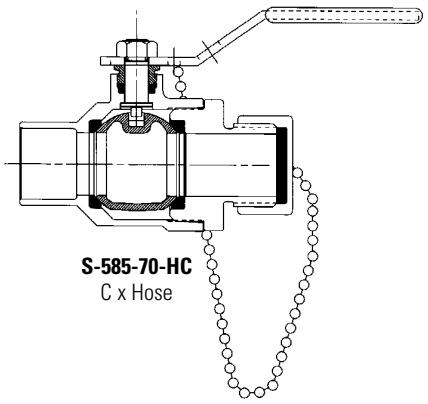

S-585-70-HC
C x Hose

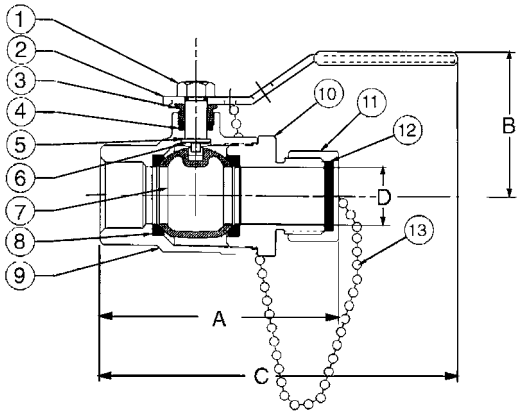

T-585-70-HC
NPT x Hose

DIMENSIONS—WEIGHTS—QUANTITIES

Size		Dimensions T-585-70-HC A		Dimensions S-585-70-HC A		Dimensions B		Dimensions T-585-70-HC C		Dimensions S-585-70-HC C		Dimensions D		T-585-70-HC		S-585-70-HC		Master
In.	mm.	In.	mm.	In.	mm.	In.	mm.	In.	mm.	In.	mm.	In.	mm.	Lbs.	Kg.	Lbs.	Kg.	Ctn. Qty.
½	15	2.84	72	2.90	74	1.88	48	5.19	132	5.25	133	.50	13	.80	.36	.74	.34	100
¾	20	3.31	84	3.47	88	2.25	57	6.25	159	6.25	159	.75	19	1.46	.66	1.42	.65	50

Note: Solder end is designed to be soft-soldered into lines using solders with the melting point not exceeding 500°F. Higher temperature solders will damage the seat material. See installation sheet packaged with valves.

◆For detailed Operating Pressure, refer to Pressure Temperature Chart on page 41.

NIBCO INC. WORLD HEADQUARTERS • 1516 MIDDLEBURY ST. • ELKHART, IN 46516-4740 • USA • PH: 1.800.234.0227
TECH SERVICES PH: 1.888.446.4226 • FAX: 1.888.336.4226 • INTERNATIONAL OFFICE PH: +1.574.295.3327 • FAX: +1.574.295.3455
www.nibco.com

Bronze Ball Valves

Two-Piece Body • Full Port • Stainless Trim • ¾" Hose Connection with Cap and Chain • Blowout-Proof Stem

600 PSI/41.4 Bar Non-Shock Cold Working Pressure◆

T-585-70-66-HC
Threaded x Hose

S-585-70-66-HC
C x Hose

CONFORMS TO MSS SP-110

MATERIAL LIST

	PART	SPECIFICATION
1.	Handle Nut	Stainless Steel 300 Series
2.	Handle	Zinc Plated Steel Clear Chromate Plastisol Coated
3.	Threaded Pack Gland	Brass ASTM B 16 Alloy C36000
4.	Packing	PTFE
5.	Thrust Washer	Reinforced PTFE
6.	Stem	Stainless Steel ASTM A 276 Type 316
7.	Ball	Stainless Steel ASTM A 276 Type 316 or ASTM A 351 Type CF8M
8.	Seat Ring (2)	Reinforced PTFE
9.	Body	Bronze ASTM B 584 Alloy C84400
10.	Hose Body End	ASTM B 124 Alloy C37700
11.	[1]Cap	Die Cast Brass
12.	Gasket	Rubber
13.	Chain	Brass

[1] Cap is for hose end thread protection only. Not to be used for pressure containing purposes.

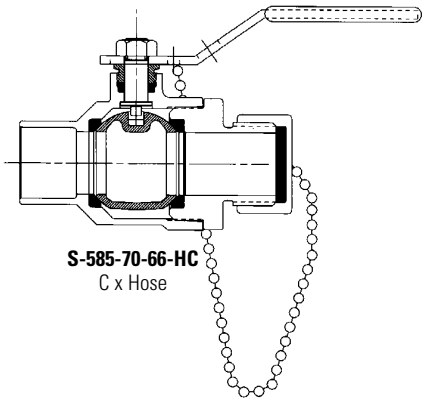

S-585-70-66-HC
C x Hose

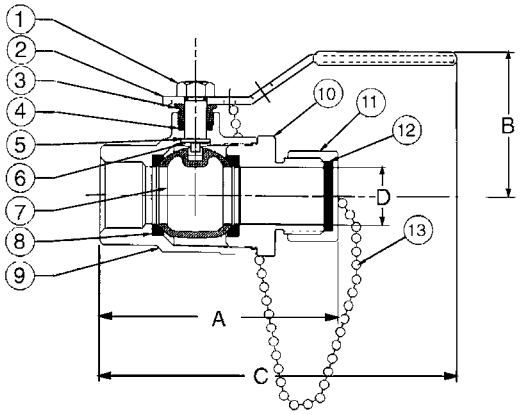

T-585-70-66-HC
NPT x Hose

DIMENSIONS—WEIGHTS—QUANTITIES

Size		Dimensions T-585-70-66-HC A		Dimensions S-585-70-66-HC A		Dimensions B		Dimensions T-585-70-66-HC C		Dimensions S-585-70-66-HC C		Dimensions D		T-585-70-66-HC		S-585-70-66-HC		Master
In.	mm.	In.	mm.	In.	mm.	In.	mm.	In.	mm.	In.	mm.	In.	mm.	Lbs.	Kg.	Lbs.	Kg.	Ctn. Qty.
½	15	2.84	72	2.90	74	1.88	48	5.19	132	5.25	133	.50	13	.80	.36	.74	.34	100
¾	20	3.31	84	3.47	88	2.25	57	6.25	159	6.25	159	.75	19	1.46	.66	1.42	.65	50

Note: Solder end is designed to be soft-soldered into lines using solders with the melting point not exceeding 500°F. Higher temperature solders will damage the seat material. See installation sheet packaged with valves.

◆For detailed Operating Pressure, refer to Pressure Temperature Chart on page 41.

Bronze Ball Valves

Two-Piece Body • Full Port • Bronze Trim • Single Union Ends • Blowout-Proof Stem

600 PSI/41.4 Bar Non-Shock Cold Working Pressure
150 PSI/10.3 Saturated Steam◆*

T-585-70-SU
NPT x NPT

S-585-70-SU
C x C

CONFORMS TO MSS SP-110

MATERIAL LIST

	PART	SPECIFICATION
1.	Handle Nut	Zinc Plated Steel
2.	Handle	Zinc Plated Steel Clear Chromate Plastisol Coated
3.	Threaded Pack Gland	Brass ASTM B 16 Alloy C36000
4.	Packing	PTFE
5.	Thrust Washer	Reinforced PTFE
6.	Stem	Silicon Bronze ASTM B 371 Alloy C69300 or ASTM B 99 Alloy C65100
7.	Ball	Brass ASTM B 124 Alloy C37700 or ASTM B16 Alloy C36000 EACH with Hard Chrome Plate
8.	Seat Ring (2)	Reinforced PTFE
9.	O-Ring	FKM
10.	Tail Piece	ASTM B 124 Alloy C37700
11.	Union Nut	ASTM B 124 Alloy C37700 or ASTM B 584 Alloy C84400
12.	Body End	ASTM B 124 Alloy C37700
13.	Body	Bronze ASTM B 584 Alloy C84400

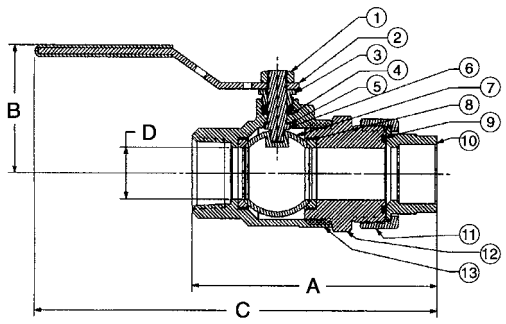

T-585-70-SU
NPT x NPT

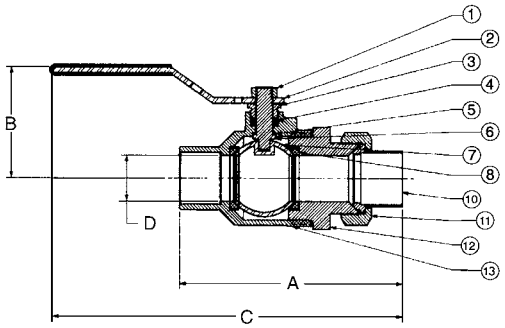

S-585-70-SU
C x C

DIMENSIONS—WEIGHTS—QUANTITIES

Size		Dimensions T-585-70-SU A		Dimensions S-585-70-SU A		Dimensions B		Dimensions T-585-70-SU C		Dimensions S-585-70-SU C		Dimensions D		T-585-70-SU		S-585-70-SU		Master
In.	mm.	In.	mm.	In.	mm.	In.	mm.	In.	mm.	In.	mm.	In.	mm.	Lbs.	Kg.	Lbs.	Kg.	Ctn. Qty.
½	15	3.57	91	3.32	84	1.88	48	6.22	158	6.00	152	.50	13	.64	.29	.60	.27	40
¾	20	4.13	105	4.20	107	2.25	57	7.28	185	7.25	184	.75	19	1.33	.60	1.27	.58	20
1	25	4.70	119	5.00	127	2.38	60	7.66	195	7.83	199	1.00	25	1.79	.81	1.72	.78	20
1 ¼	32	5.38	137	6.09	155	3.00	76	9.97	253	10.23	260	1.25	32	2.17	.98	3.18	1.44	10
1 ½	40	6.06	154	7.09	180	3.16	80	10.40	264	10.81	275	1.50	38	3.27	1.48	5.12	2.32	6
2	50	6.38	162	7.66	195	3.50	89	10.50	267	10.97	279	2.00	51	5.09	2.31	7.10	3.22	4

*** Consult MSS SP123 for pressure temperature limitations**

◆For detailed Operating Pressure, refer to Pressure Temperature Chart on page 41.

NIBCO INC. WORLD HEADQUARTERS • 1516 MIDDLEBURY ST. • ELKHART, IN 46516-4740 • USA • PH: 1.800.234.0227
TECH SERVICES PH: 1.888.446.4226 • FAX: 1.888.336.4226 • INTERNATIONAL OFFICE PH: +1.574.295.3327 • FAX: +1.574.295.3455
www.nibco.com

Bronze Ball Valves

Two-Piece Body • Full Port • Bronze Trim • Single Union Ends • Blowout-Proof Stem

600 PSI/41.4 Bar Non-Shock Cold Working Pressure
150 PSI/10.3 Bar Saturated Steam◆*

CONFORMS TO MSS SP-110

TS-585-70-SU
Threaded x Solder

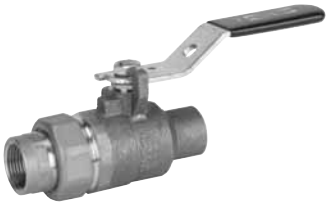

ST-585-70-SU
Solder x Threaded

MATERIAL LIST

	PART	SPECIFICATION
1.	Handle Nut	Zinc Plated Steel
2.	Handle	Zinc Plated Steel Clear Chromate Plastisol Coated
3.	Threaded Pack Gland	Brass ASTM B 16 Alloy C36000
4.	Packing	PTFE
5.	Thrust Washer	Reinforced PTFE
6.	Stem	Silicon Bronze ASTM B 371 Alloy C69300 or ASTM B 99 Alloy C65100
7.	Ball	Brass ASTM B 124 Alloy C37700 or ASTM B16 Alloy C36000 EACH with Hard Chrome Plate
8.	Seat Ring (2)	Reinforced PTFE
9.	O-Ring	FKM
10.	Tail Piece	ASTM B 124 Alloy C37700
11.	Union Nut	ASTM B 124 Alloy C37700 or ASTM B 584 Alloy C84400
12.	Body End	ASTM B 124 Alloy C37700
13.	Body	Bronze ASTM B 584 Alloy C84400

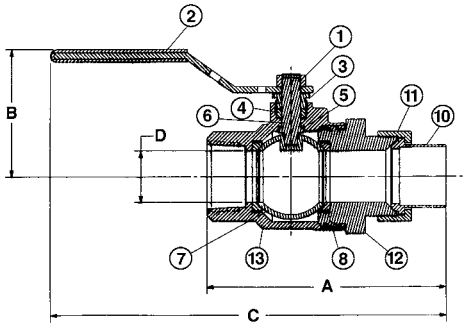

TS-585-70-SU
NPT x C

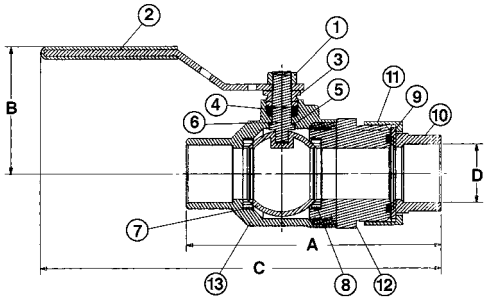

ST-585-70-SU
C x NPT

DIMENSIONS—WEIGHTS—QUANTITIES

Size		Dimensions ST-585-70-SU A		TS-585-70-SU A		B		ST-585-70-SU C		TS-585-70-SU C		D		ST-585-70-SU Lbs.	ST-585-70-SU Kg.	TS-585-70-SU Lbs.	TS-585-70-SU Kg.	Master Ctn. Qty.
In.	mm.	In.	mm.	In.	mm.	In.	mm.	In.	mm.	In.	mm.	In.	mm.					
½	15	3.53	90	3.21	82	1.88	48	6.22	158	6.00	152	.50	132	1.21	.55	1.21	.55	40
¾	20	4.22	107	4.10	104	2.25	57	7.28	185	7.25	184	.75	19	1.84	.84	1.84	.84	20
1	25	4.86	123	4.91	125	2.38	60	7.66	195	7.83	199	1.00	25	2.91	1.32	2.91	1.32	20
1 ¼	32	5.79	147	5.63	143	3.00	76	9.97	253	10.23	260	1.25	32	4.39	2.00	4.39	2.00	10
1 ½	40	6.63	168	6.28	160	3.16	80	10.40	264	10.81	275	1.50	38	6.44	2.93	6.44	2.93	6
2	50	7.10	180	6.89	175	3.50	89	10.50	267	10.91	277	2.00	51	9.44	4.29	9.44	4.29	4

*** Consult MSS SP123 for pressure temperature limitations**

◆For detailed Operating Pressure, refer to Pressure Temperature Chart on page 41.

Bronze Ball Valves

Dezincification Resistant

Two-Piece Body • 250 Steam Rating • Full Port • 316SS Trim • Carbon-Filled PTFE Seats • Blowout-Proof Stem • Vented Ball

600 PSI/41.4 Bar Non-Shock Cold Working Pressure
250 PSI/17.2 Bar Saturated Steam◆

CONFORMS TO MSS SP-110

MATERIAL LIST

	PART	SPECIFICATION
1.	Handle Nut	300 Series Stainless Steel
2.	Handle	Stainless Steel Plastisol Coated
3.	Threaded Pack Gland	Brass ASTM B 16 Alloy C36000
4.	Packing	Carbon Filled PTFE
5.	Thrust Washer	Carbon Filled PTFE
6.	Stem	Stainless Steel ASTM A 276 Type 316
7.	Ball (Vented)	Stainless Steel ASTM A 276 Type 316 or ASTM A 351 Type CF8M
8.	Seat Ring (2)	Carbon Filled PTFE
9.	Body	Bronze ASTM B 61 Alloy C92200
10.	Body End Piece	Bronze ASTM B 584 Alloy C84400

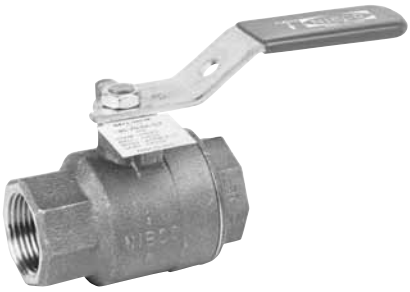

T-585-70-66-ST
Threaded

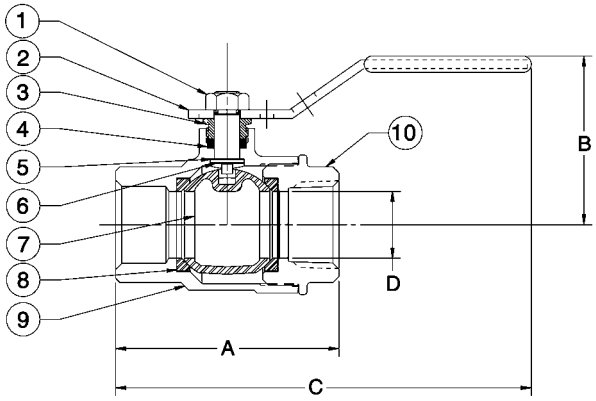

T-585-70-66-ST
NPT x NPT

DIMENSIONS—WEIGHTS—QUANTITIES

Size		Dimensions A		B		C		D		T-585-70-66-ST		Master
In.	mm.	In.	mm.	In.	mm.	In.	mm.	In.	mm.	Lbs.	Kg.	Ctn. Qty.
½	15	2.44	62	1.88	48	5.19	132	.50	13	.64	.29	10
¾	20	2.94	75	2.25	57	6.25	159	.75	19	1.33	.60	5
1	25	3.34	85	2.38	61	6.44	164	1.00	25	1.79	.81	5
1 ¼	32	4.19	106	3.00	76	6.75	171	1.25	32	2.17	.98	5
1 ½	40	4.72	120	3.16	80	9.06	230	1.50	38	3.27	1.48	5
2	50	5.16	131	3.50	89	9.25	235	2.00	51	5.09	2.31	2

◆For detailed Operating Pressure, refer to Pressure Temperature Chart on page 41.

NIBCO INC. WORLD HEADQUARTERS • 1516 MIDDLEBURY ST. • ELKHART, IN 46516-4740 • USA • PH: 1.800.234.0227
TECH SERVICES PH: 1.888.446.4226 • FAX: 1.888.336.4226 • INTERNATIONAL OFFICE PH: +1.574.295.3327 • FAX: +1.574.295.3455
www.nibco.com

Bronze Ball Valves

Dezincification Resistant

Two-Piece Body • Full Port ¼"-1" • Conventional Port 1¼"-2" • Bronze Trim • Safety Vent® for Pneumatic Applications • Blowout-Proof Stem

600 PSI/41.4 Bar Non-Shock Cold Working Pressure

O.S.H.A. 1910.147

MATERIAL LIST

	PART	SPECIFICATION
1.	Handle Nut	Zinc Plated Steel
2.	Handle	Zinc Plated Steel Clear Chromate Plastisol Coated
3.	Threaded Pack Gland	Brass ASTM B 16 Alloy C36000
4.	Packing	PTFE
5.	Stem	Silicon Bronze ASTM B 371 Alloy C69430 or C69300 or ASTM B 99 Alloy C65100
6.	Thrust Washer	Reinforced PTFE
7.	Ball	Brass ASTM B 124 Alloy C37700 or ASTM B16 Alloy C36000 EACH with Hard Chrome Plate
8.	Seat Ring (2)	Reinforced PTFE
9.	Body	Bronze ASTM B 584 Alloy C84400
10.	Body End Piece	Bronze ASTM B 584 Alloy C84400
11.	Locking Device	300 Series Stainless Steel

Note: A Buna O-ring is installed on the upstream side behind the seat ring. Maximum temperature of Buna is 180° F. (Not Shown)

T-585-70-SV
¼"-1" Full Port
Threaded

T-580-70-SV
1¼"-2" Conventional Port
Threaded

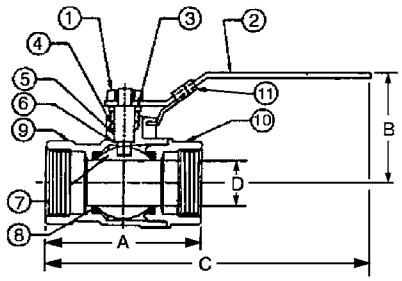

T-585-70-SV
T-580-70-SV
NPT x NPT

DIMENSIONS—WEIGHTS—QUANTITIES

Size		Dimensions A		B		C		D		T-585-70-SV T-580-70-SV		Master
In.	mm.	In.	mm.	In.	mm.	In.	mm.	In.	mm.	Lbs.	Kg.	Ctn. Qty.
†¼	8	2.00	51	1.75	44	5.00	127	.38	10	.49	.22	100
†⅜	10	2.00	51	1.75	44	5.00	127	.38	10	.48	.22	100
†½	15	2.44	62	1.88	48	5.19	132	.50	13	.68	.31	100
†¾	20	2.94	75	2.25	57	6.25	159	.75	19	1.38	.63	50
†1	25	3.34	85	2.38	60	6.44	164	1.00	25	1.99	.90	40
1¼	32	3.94	100	2.63	67	6.75	171	1.00	25	2.37	1.07	20
1½	40	4.31	109	3.00	76	8.88	226	1.25	32	3.57	1.62	20
2	50	4.63	118	3.16	80	9.06	230	1.50	38	5.20	2.36	10

NIBCO T-585-70-SV Safety Vent® lock-out ball valves provide positive energy isolation per O.S.H.A. standard 1910.147. Valves lock in closed position only. For compressed air. To order specify T-585-70-SV/T-580-70-SV.

† NIBCO Supplies Full Port T-585-70-SV on this size.

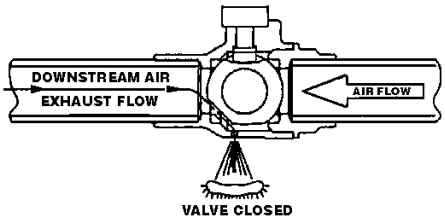

VALVE CLOSED

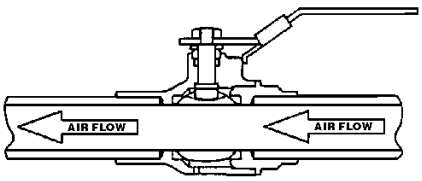

VALVE OPEN

Bronze Ball Valves

Dezincification Resistant

Two-Piece Body • Full Port ¼"-1" • Conventional Port 1¼"-3" • Bronze Trim • Blowout-Proof Stem • UL Listed

250 PSI/17.2 Bar Non-Shock LP Gas per UL842

CONFORMS TO MSS SP-110 •
CSA CERTIFIED TO ANSI/ASME B 16.33 AND CGA 3.16
FOR NATURAL AND PROPANE GAS TO 125 PSIG (¼"-1")

T-585-70-UL
¼"-1" Full Port CSA Threaded

C US

T-580-70-UL
1¼"-3" Conventional Port Threaded
UL Only

MATERIAL LIST

	PART	SPECIFICATION
1.	Handle Nut	Zinc Plated Steel
2.	Handle	Zinc Plated Steel Clear Chromate Plastisol Coated
3.	Threaded Pack Gland	Brass ASTM B 16 Alloy C36000
4.	Packing	PTFE
5.	Stem	Silicon Bronze ASTM B 371 Alloy C69430 or ASTM B 99 Alloy C65100
6.	Thrust Washer	Reinforced PTFE
7.	Ball	Brass ASTM B 124 Alloy C37700 or ASTM B16 Alloy C36000 EACH with Hard Chrome Plate
8.	Seat Ring (2)	Reinforced PTFE
9.	Body	Bronze ASTM B 584 Alloy C84400
10.	Body End Piece	Bronze ASTM B 584 Alloy C84400

UL Listed For:
YSDT LP gas shut-off
YQNZ Compressed gas shut-off
YRPV Gas shut-off
YRBX Flammable liquid shut-off
MHKZ Manual valves

CUL Listed For:
YSDT7 LP gas shut-off for Canada

Service
A - Air or non-toxic, non-flammable gas
G - City gas supplied by public utilities
GA - Gasoline
LP - Liquified petroleum gas, 250 PSI max.
02 - No. 1 and 2 fuel oil
04 - No. 4 fuel oil
05 - No. 5 fuel oil
06 - No. 6 fuel oil

DIMENSIONS—WEIGHTS—QUANTITIES

Size		Dimensions A		B		C		D		T-585-70-UL T-580-70-UL		Master
In.	mm.	In.	mm.	In.	mm.	In.	mm.	In.	mm.	Lbs.	Kg.	Ctn. Qty.
†¼	8	2.00	51	1.75	44	5.00	127	.38	10	.45	.21	100
†⅜	10	2.00	51	1.75	44	5.00	127	.38	10	.45	.20	100
†½	15	2.44	62	1.88	48	5.19	132	.50	13	.64	.29	100
†¾	20	2.94	75	2.25	57	6.25	159	.75	19	1.33	.60	50
†1	25	3.34	85	2.38	60	6.44	164	1.00	25	1.79	.81	40
1¼	32	3.94	100	2.63	67	6.75	171	1.00	25	2.17	.98	20
1½	40	4.31	109	3.00	76	8.88	226	1.25	32	3.27	1.48	20
2	50	4.63	118	3.16	80	9.06	230	1.50	38	5.09	2.31	10
2½	65	5.84	148	3.50	89	9.66	245	2.00	51	8.25	3.74	6
3	80	7.09	180	4.41	112	11.53	293	2.50	64	15.65	7.10	4

† NIBCO Supplies Full Port T-585-70-UL on this size.

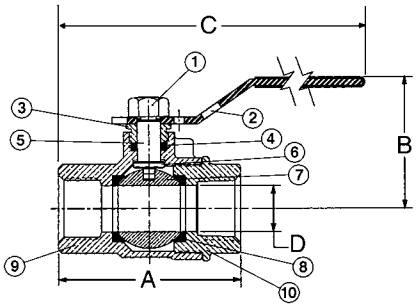

T-585-70-UL
T-580-70-UL
NPT x NPT

NIBCO INC. WORLD HEADQUARTERS • 1516 MIDDLEBURY ST. • ELKHART, IN 46516-4740 • USA • PH: 1.800.234.0227
TECH SERVICES PH: 1.888.446.4226 • FAX: 1.888.336.4226 • INTERNATIONAL OFFICE PH: +1.574.295.3327 • FAX: +1.574.295.3455
www.nibco.com

Bronze Ball Valves

Dezincification Resistant

Two-Piece Body • Full Port • 316SS Trim • Blowout-Proof Stem •
ISO Direct-Mount Pad for Actuation • Vented Ball

600 PSI/41.4 Bar Non-Shock Cold Working Pressure
150 PSI/10.3 Bar Saturated Steam◆

CONFORMS TO MSS SP-110 •
ACTUATOR MOUNT PER ISO 5211

TM-585-70-66
Threaded
with Mounting Pads

MATERIAL LIST

	PART	SPECIFICATION
1.	Stem	Stainless Steel ASTM A 276 Type 316
2.	O-Ring (2)	Fluoroelastomer
3.	Thrust Washer	Reinforced PTFE
4.	Seat Ring (2)	Carbon Filled PTFE
5.	Ball (Vented)	Stainless Steel ASTM A 276 Type 316 or ASTM A 351 Type CF8M
6.	Body	Bronze ASTM B 584 Alloy C84400
7.	Body End Piece	Bronze ASTM B 584 Alloy C84400

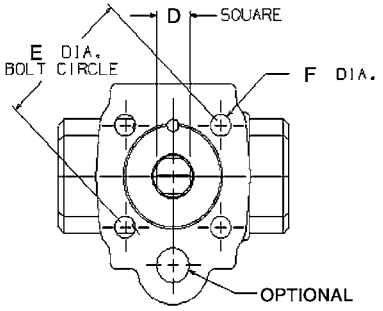

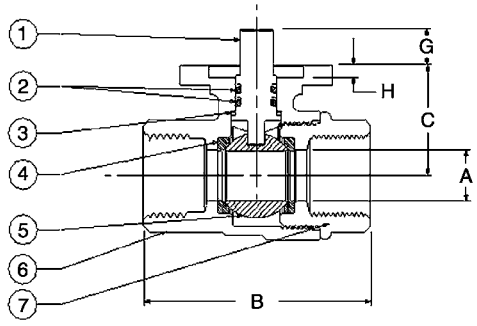

TM-585-70-66
NPT x NPT

DIMENSIONS—WEIGHTS—QUANTITIES

Size		Flange	Dimensions A		B		C		D		E		F		G		H		TM-585-70-66		Master
In.	mm.	Size	In.	mm.	In.	mm.	In.	mm.	In.	mm.	In.	mm.	In.	mm.	In.	mm.	In.	mm.	Lbs.	Kg.	Ctn. Qty.
½	15	F03	.50	13	2.43	62	1.10	28	.35	9	1.42	36	.22	5.6	.39	10	.12	3	.82	.37	50
¾	20	F03	.75	19	2.94	75	1.37	35	.35	9	1.42	36	.22	5.6	.39	10	.12	3	1.23	.56	25
1	25	F04	1.00	25	3.33	85	1.56	40	.43	11	1.65	42	.22	5.6	.47	12	.12	3	1.88	.85	20
1¼	32	F04	1.25	32	4.19	106	2.04	52	.43	11	1.65	42	.22	5.6	.47	12	.16	4	3.06	1.39	10
1½	40	F04	1.50	38	4.70	119	2.27	58	.43	11	1.65	42	.22	5.6	.47	12	.16	4	4.45	2.02	10
2	50	F05	2.00	51	5.15	131	2.50	64	.55	14	1.97	50	.27	6.8	.63	16	.16	4	6.85	3.11	6
†2½	65	F05	2.00	51	5.84	148	2.50	64	.55	14	1.97	50	.27	6.8	.63	16	.16	4	9.00	4.06	1

† NIBCO Supplies TM-580-70-66 Conventional Port Valves.

◆For detailed Operating Pressure, refer to Pressure Temperature Chart on page 41.

Bronze Ball Valves

Dezincification Resistant

Three-Way Body • Full Port ½"-1" • Conventional Port 1¼"-2" •
3-Way Bronze Ball Valve • Bronze Trim • Blowout-Proof Stem

400 PSI/27.6 Bar Non-Shock Cold Working Pressure

T-585-70-W3
Threaded

S-585-70-W3
Solder

CONFORMS TO MSS SP-110

MATERIAL LIST

	PART	SPECIFICATION
1.	Handle	Zinc Plated Steel Clear Chromate Plastisol Coated
2.	Handle Nut	Stainless Steel 300 Series
3.	Threaded Pack Gland	Brass ASTM B 16 Alloy C36000
4.	Packing	PTFE
5.	Thrust Washer	Reinforced PTFE
6.	Stem	Brass ASTM B 16 Alloy C36000
7.	Seat Ring (2)	Reinforced PTFE
8.	Ball	Brass ASTM B 124 Alloy C37700 or ASTM B16 Alloy C36000 EACH with Hard Chrome Plate
9.	Body	Bronze ASTM B 584 Alloy C84400
10.	Body End Piece	Bronze ASTM B 584 Alloy C84400

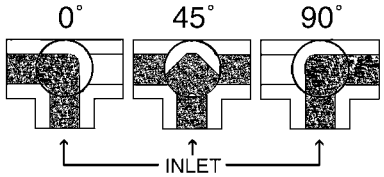

Flow Pattern
Lever Position

Note: Open port pressure must exceed closed port pressure. If closed port pressure exceeds open port pressure, ball may be forced off of the seat ring which could allow mixing from all ports.

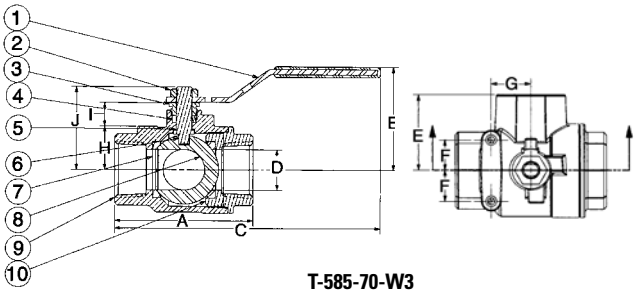

T-585-70-W3
NPT x NPT

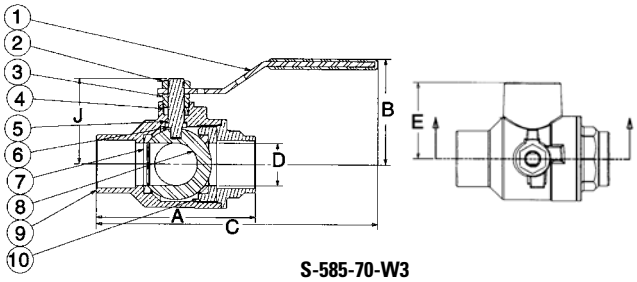

S-585-70-W3
C x C

DIMENSIONS—WEIGHTS—QUANTITIES

T-585-70-W3 Dimensions

Size		A		B		C		D		E		F		G		H		I		J		T-585-70-W3		Master
In.	mm.	In.	mm.	In.	mm.	In.	mm.	In.	mm.	In.	mm.	In.	mm.	In.	mm.	In.	mm.	In.	mm.	In.	mm.	Lbs.	Kg.	Ctn. Qty.
½	15	2.44	62	1.88	48	5.19	132	.50	13	1.22	31	.69	18	.88	22	.65	17	.51	13	1.45	37	.84	.38	50
¾	20	2.94	75	2.25	57	6.25	159	.75	19	1.45	37	.69	18	.88	22	.85	22	.57	14	1.80	46	1.62	.73	25
1	25	3.34	85	2.38	60	6.44	164	1.00	25	1.69	43	.69	18	.88	22	1.05	27	.57	14	1.97	50	2.28	1.03	20
†1 ¼	32	4.19	106	3.00	76	6.75	171	1.12	28	1.98	50	.75	19	.94	24	1.23	31	.87	22	2.60	66	4.19	1.90	10
†1 ½	40	4.72	120	3.16	80	9.06	230	1.38	35	2.38	60	.75	19	.94	24	1.48	38	.87	22	2.84	72	6.00	2.72	8
†2	50	5.31	135	3.50	89	9.25	235	1.88	48	2.75	70	.75	19	.94	24	1.88	48	.70	18	3.14	80	9.03	4.09	4

† NIBCO supplies conventional port T-580-70-W3 on this size.

S-585-70-W3 Dimensions

Size		A		B		C		D		E		J		S-585-70-W3		Master
In.	mm.	In.	mm.	In.	mm.	In.	mm.	In.	mm.	In.	mm.	In.	mm.	Lbs.	Kg.	Ctn. Qty.
½	15	2.56	65	1.88	48	5.19	132	.50	13	1.08	27	1.45	37	.67	.30	50
¾	20	3.25	83	2.25	57	6.25	159	.75	19	1.50	38	1.80	46	1.35	.61	25
1	25	3.75	95	2.38	60	6.63	168	1.00	25	1.85	47	1.97	50	2.07	.94	20

NIBCO INC. WORLD HEADQUARTERS • 1516 MIDDLEBURY ST. • ELKHART, IN 46516-4740 • USA • PH: 1.800.234.0227
TECH SERVICES PH: 1.888.446.4226 • FAX: 1.888.336.4226 • INTERNATIONAL OFFICE PH: +1.574.295.3327 • FAX: +1.574.295.3455
www.nibco.com

Bronze Ball Valves

Dezincification Resistant

Three-Way Body • Full Port ½"-1" • Conventional Port 1¼"-2" • 3-Way Bronze Ball Valve • 316SS Trim • Blowout-Proof Stem • Vented Ball

400 PSI/27.6 Bar Non-Shock Cold Working Pressure

T-585-70-66-W3
Threaded

S-585-70-66-W3
Solder

CONFORMS TO MSS SP-110

MATERIAL LIST

PART	SPECIFICATION
1. Handle	Zinc Plated Steel Clear Chromate Plastisol Coated
2. Handle Nut	Stainless Steel 300 Series
3. Threaded Pack Gland	Brass ASTM B 16 Alloy C36000
4. Packing	PTFE
5. Thrust Washer	Reinforced PTFE
6. Stem	Stainless Steel ASTM A 276 Type 316
7. Seat Ring (2)	Reinforced PTFE
8. Ball (Vented)	Stainless Steel ASTM A 276 Type 316 or ASTM A 351 Type CF8M
9. Body C84400	Bronze ASTM B 584 Alloy
10. Body End Piece	Bronze ASTM B 584 Alloy C84400

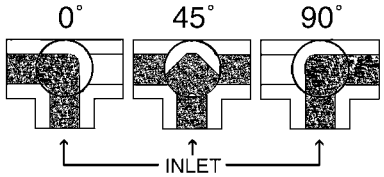

Flow Pattern
Lever Position

Note: Open port pressure must exceed closed port pressure. If closed port pressure exceeds open port pressure, ball may be forced off of the seat ring which could allow mixing from all ports.

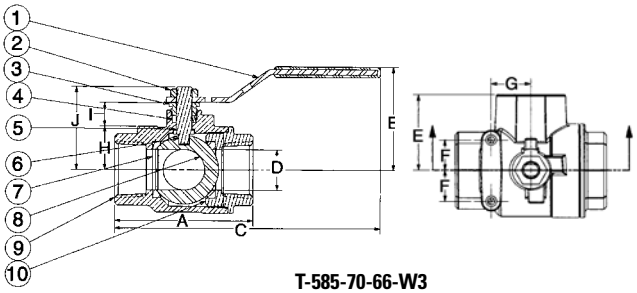

T-585-70-66-W3
NPT x NPT

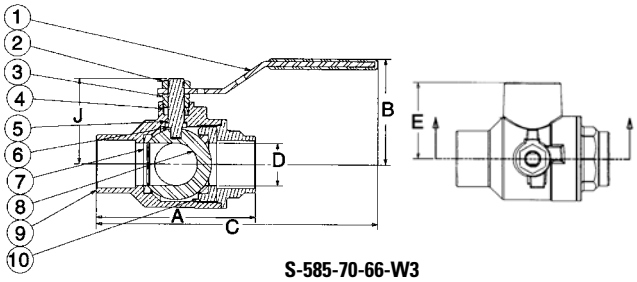

S-585-70-66-W3
C x C

DIMENSIONS—WEIGHTS—QUANTITIES

T-585-70-66-W3 Dimensions

Size In.	Size mm.	A In.	A mm.	B In.	B mm.	C In.	C mm.	D In.	D mm.	E In.	E mm.	F In.	F mm.	G In.	G mm.	H In.	H mm.	I In.	I mm.	J In.	J mm.	T-585-70-66-W3 Lbs.	T-585-70-66-W3 Kg.	Master Ctn. Qty.
½	15	2.44	62	1.88	48	5.19	132	.50	13	1.22	31	.69	18	.88	22	.65	17	.51	13	1.45	37	.84	.38	50
¾	20	2.94	75	2.25	57	6.25	159	.75	19	1.45	37	.69	18	.88	22	.85	22	.57	14	1.80	46	1.62	.73	25
1	25	3.34	85	2.38	60	6.44	164	1.00	25	1.69	43	.69	18	.88	22	1.05	27	.57	14	1.97	50	2.28	1.03	20
†1 ¼	32	4.19	106	3.00	76	6.75	171	1.12	28	1.98	50	.75	19	.94	24	1.23	31	.87	22	2.60	66	4.19	1.90	10
†1 ½	40	4.72	120	3.16	80	9.06	230	1.38	35	2.38	60	.75	19	.94	24	1.48	38	.87	22	2.84	72	6.00	2.72	8
†2	50	5.31	135	3.50	89	9.25	235	1.88	48	2.75	70	.75	19	.94	24	1.88	48	.70	18	3.14	80	9.03	4.09	4

† NIBCO supplies conventional port T-580-70-66-W3 on this size.

S-585-70-66-W3 Dimensions

Size In.	Size mm.	A In.	A mm.	B In.	B mm.	C In.	C mm.	D In.	D mm.	E In.	E mm.	J In.	J mm.	S-585-70-66-W3 Lbs.	S-585-70-66-W3 Kg.	Master Ctn. Qty.
½	15	2.56	65	1.88	48	5.19	132	.50	13	1.08	27	1.45	37	.67	.30	50
¾	20	3.25	83	2.25	57	6.25	159	.75	19	1.50	38	1.80	46	1.35	.61	25
1	25	3.75	95	2.38	60	6.63	168	1.00	25	1.85	47	1.97	50	2.07	.94	20

Bronze Ball Valves

Dezincification Resistant

Three-Piece Body • Full Port ¼"-1" • Conventional Port 1¼"-3" • Bronze Trim • Blowout-Proof Stem

600 PSI/41.4 Bar Non-Shock Cold Working Pressure
150 PSI/10.3 Bar Saturated Steam◆

CONFORMS TO MSS SP-110

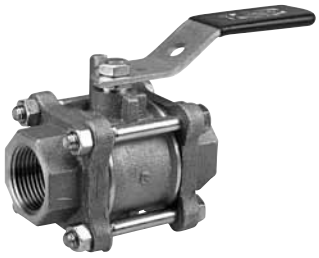

T-590-Y
Threaded

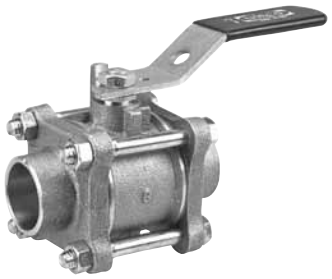

S-590-Y
Solder

MATERIAL LIST

	PART	SPECIFICATION
1.	Handle Nut	Zinc Plated Steel
2.	Handle	Zinc Plated Steel Clear Chromate Plastisol Coated
3.	Threaded Pack Gland	Brass ASTM B 16 Alloy C36000
4.	Stem	Silicon Bronze ASTM B 371 Alloy C69430 or ASTM B 99 Alloy C65100
5.	Body	Bronze ASTM B 584 Alloy C84400
6.	Packing	PTFE
7.	Body End (2)	Bronze ASTM B 584 Alloy C84400
8.	O-Ring Seal (2)	Fluorocarbon Rubber
9.	Seat Ring (2)	PTFE
10.	Ball	Brass ASTM B 124 Alloy C37700 or ASTM B16 Alloy C36000 EACH with Hard Chrome Plate
11.	Thrust Washer	Reinforced PTFE
12.	Body Bolts	Zinc Dichromate Plated Steel ASTM A 449 Grade 5
13.	Body Nuts	Zinc Dichromate Plated Steel ASTM A 449 Grade 5

Note: Valves are static grounded by grounding washer. (Not Shown)

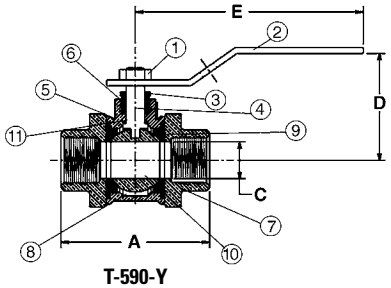

T-590-Y
NPT x NPT

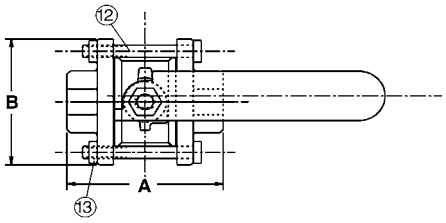

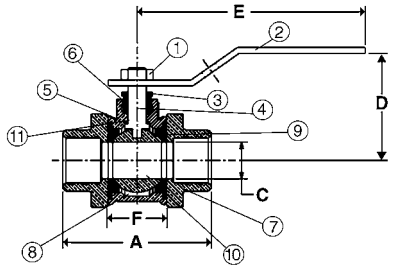

S-590-Y
C x C

DIMENSIONS—WEIGHTS—QUANTITIES

Size		Dimensions T-590-Y A		Dimensions S-590-Y A		B		C		D		E		S-590-Y F		T-590-Y		S-590-Y		Master
In.	mm.	In.	mm.	In.	mm.	In.	mm.	In.	mm.	In.	mm.	In.	mm.	In.	mm.	Lbs.	Kg.	Lbs.	Kg.	Ctn. Qty.
†¼	8	2.50	64	1.69	43	1.81	46	.38	10	1.69	43	3.91	99	1.13	29	1.03	.47	.89	.40	50
†⅜	10	2.50	64	1.81	46	1.81	46	.38	10	1.69	43	3.91	99	1.13	29	.98	.44	.89	.40	50
†½	15	2.50	64	2.06	52	1.81	46	.50	13	1.69	43	3.91	99	1.13	29	1.03	.47	.89	.40	50
†¾	20	3.00	76	2.94	75	1.94	49	.75	19	2.00	51	4.66	118	1.44	37	1.70	.77	1.59	.72	30
†1	25	3.69	94	3.66	93	2.50	64	1.00	25	2.25	57	4.66	118	1.84	47	2.82	1.28	2.55	1.15	20
1¼	32	3.69	94	3.84	98	2.50	64	1.00	25	2.25	57	4.66	118	1.88	48	2.65	1.20	2.38	1.08	20
1½	40	4.09	104	4.25	108	2.69	68	1.25	32	2.75	70	6.69	170	2.03	52	3.77	1.71	3.42	1.55	10
2	50	4.81	122	5.25	133	3.00	76	1.50	38	2.97	75	6.69	170	2.56	65	5.78	2.62	5.31	2.41	10
2½	65	6.16	157	6.12	155	4.00	102	2.00	51	3.63	92	6.69	170	3.19	81	10.75	4.88	9.92	4.50	4
3	80	6.84	174	7.44	189	5.00	127	2.50	64	4.09	104	8.00	203	4.13	105	19.14	8.68	17.93	8.13	2

†NIBCO supplies full port T or S-595-Y on this size.

◆For detailed Operating Pressure, refer to Pressure Temperature Chart on page 41.

NIBCO INC. WORLD HEADQUARTERS • 1516 MIDDLEBURY ST. • ELKHART, IN 46516-4740 • USA • PH: 1.800.234.0227
TECH SERVICES PH: 1.888.446.4226 • FAX: 1.888.336.4226 • INTERNATIONAL OFFICE PH: +1.574.295.3327 • FAX: +1.574.295.3455
www.nibco.com

Bronze Ball Valves

Dezincification Resistant

Three-Piece Body • Full Port ¼"-1" • Conventional Port 1¼"-3" • 316SS Trim • Blowout-Proof Stem • Vented Ball

600 PSI/41.4 Bar Non-Shock Cold Working Pressure
150 PSI/10.3 Bar Saturated Steam◆

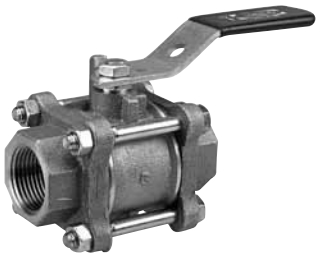

T-590-Y-66
Threaded

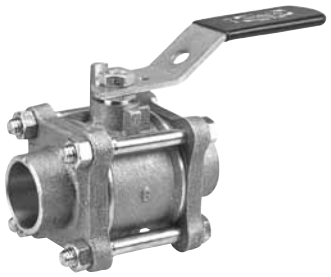

S-590-Y-66
Solder

CONFORMS TO MSS SP-110

MATERIAL LIST

	PART	SPECIFICATION
1.	Handle Nut	Stainless Steel 300 Series
2.	Handle	Zinc Plated Steel Clear Chromate Plastisol Coated
3.	Threaded Pack Gland	Brass ASTM B 16 Alloy C36000
4.	Stem	Stainless Steel ASTM A 276 Type 316
5.	Body	Bronze ASTM B 584 Alloy C84400
6.	Packing	PTFE
7.	Body End (2)	Bronze ASTM B 584 Alloy C84400
8.	O-Ring Seal (2)	Fluorocarbon Rubber
9.	Seat Ring (2)	PTFE
10.	Ball (Vented)	Stainless Steel ASTM A 276 Type 316 or ASTM A 351 Type CF8M
11.	Thrust Washer	Reinforced PTFE
12.	Body Bolts	Zinc Dichromate Plated Steel ASTM A 449 Grade 5
13.	Body Nuts	Zinc Dichromate Plated Steel ASTM A 449 Grade 5

Note: Valves are static grounded by a grounding washer. (Not Shown)

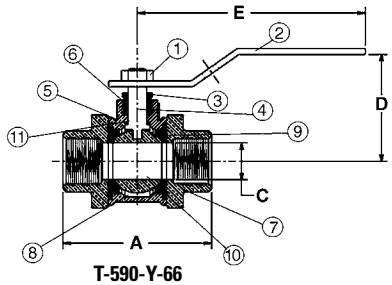

T-590-Y-66
NPT x NPT

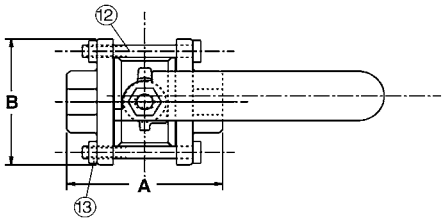

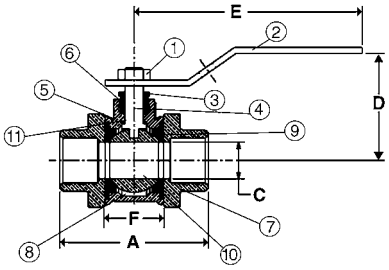

S-590-Y-66
C x C

DIMENSIONS—WEIGHTS—QUANTITIES

Size		Dimensions T-590-Y-66 A		Dimensions S-590-Y-66 A		B		C		D		E		S-590-Y-66 F		T-590-Y-66		S-590-Y-66		Master
In.	mm.	In.	mm.	In.	mm.	In.	mm.	In.	mm.	In.	mm.	In.	mm.	In.	mm.	Lbs.	Kg.	Lbs.	Kg.	Ctn. Qty.
†¼	8	2.50	64	1.69	43	1.81	46	.38	10	1.69	43	3.91	99	1.13	29	1.03	.47	.89	.40	50
†⅜	10	2.50	64	1.81	46	1.81	46	.38	10	1.69	43	3.91	99	1.13	29	.98	.44	.89	.40	50
†½	15	2.50	64	2.06	52	1.81	46	.50	13	1.69	43	3.91	99	1.13	29	1.03	.47	.89	.40	50
†¾	20	3.00	76	2.94	75	1.94	49	.75	19	2.00	51	4.66	118	1.44	37	1.70	.77	1.59	.72	30
†1	25	3.69	94	3.66	93	2.50	64	1.00	25	2.25	57	4.66	118	1.84	47	2.82	1.28	2.55	1.15	20
1¼	32	3.69	94	3.84	98	2.50	64	1.00	25	2.25	57	4.66	118	1.88	48	2.65	1.20	2.38	1.08	20
1½	40	4.09	104	4.25	108	2.69	68	1.25	32	2.75	70	6.69	170	2.03	52	3.77	1.71	3.42	1.55	10
2	50	4.81	122	5.25	133	3.00	76	1.50	38	2.97	75	6.69	170	2.56	65	5.78	2.62	5.31	2.41	10
2½	65	6.16	157	6.12	155	4.00	102	2.00	51	3.63	92	6.69	170	3.19	81	10.75	4.88	9.92	4.50	4
3	80	6.84	174	7.44	189	5.00	127	2.50	64	4.09	104	8.00	203	4.13	105	19.14	8.68	17.93	8.13	2

†NIBCO supplies full port T or S-595-Y-66 on this size.

◆ For detailed Operating Pressure, refer to Pressure Temperature Chart on page 41.

Bronze Ball Valves

Dezincification Resistant

Three-Piece Body • Full Port ¼"-1" • Conventional Port 1¼"-3" • UL Listed for Flammable Liquids • Blowout-Proof Stem

175 PSI/12.1 Bar Non-Shock LP Gas per UL842

CONFORMS TO MSS SP-110 • UL842

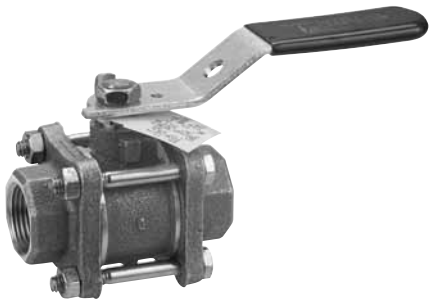

T-590-Y-UL
Threaded

MATERIAL LIST

	PART	SPECIFICATION
1.	Handle Nut	Zinc Plated Steel
2.	Handle	Zinc Plated Steel Clear Chromate Plastisol Coated
3.	Threaded Pack Gland	Brass ASTM B 16 Alloy C36000
4.	Stem	Silicon Bronze ASTM B 371 Alloy C69430 or ASTM B 99 Alloy C65100
5.	Body	Bronze ASTM B 584 Alloy C84400
6.	Packing	PTFE
7.	Body End (2)	Bronze ASTM B 584 Alloy C84400
8.	O-Ring Seal (2)	Fluorocarbon Rubber
9.	Seat Ring (2)	PTFE
10.	Ball	Brass ASTM B 124 Alloy C37700 or ASTM B16 Alloy C36000 EACH with Hard Chrome Plate
11.	Thrust Washer	Reinforced PTFE
12.	Body Bolts	Zinc Dichromate Plated Steel ASTM A 449 Grade 5
13.	Body Nuts	Zinc Dichromate Plated Steel ASTM A 449 Grade 5

Note: Valves are static grounded by a grounding washer. (Not Shown)

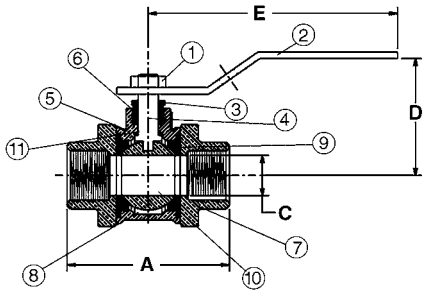

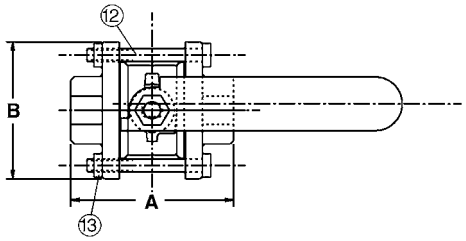

T-590-Y-UL
NPT x NPT

UL Listed For:
YQNZ Compressed gas shut-off
YRPV Gas shut-off
YRBX Flammable liquid shut-off
MHKZ Manual valves

Service
A - Air or non-toxic, non-flammable gas
G - City gas supplied by public utilities
GA - Gasoline
LP - Liquified petroleum gas, 175 PSI max.
02 - No. 1 and 2 fuel oil
04 - No. 4 fuel oil
05 - No. 5 fuel oil
06 - No. 6 fuel oil

DIMENSIONS—WEIGHTS—QUANTITIES

Size		Dimensions A		B		C		D		E		T-590-Y-UL		Master
In.	mm.	In.	mm.	In.	mm.	In.	mm.	In.	mm.	In.	mm.	Lbs.	Kg.	Ctn. Qty.
†¼	8	2.50	64	1.81	46	.38	10	1.06	27	3.90	99	.94	.43	50
†⅜	10	2.50	64	1.81	46	.38	10	1.06	27	3.90	99	.94	.43	50
†½	15	2.50	64	1.81	46	.50	13	1.06	27	3.90	99	1.01	.47	50
†¾	20	3.00	76	1.94	49	.75	19	2.00	51	4.66	118	1.73	.79	30
†1	25	3.69	94	2.50	64	1.00	25	2.25	57	4.66	118	2.75	1.25	20
1¼	32	3.69	94	2.50	64	1.00	25	2.25	57	4.66	118	2.65	1.20	20
1½	40	4.09	104	2.69	68	1.25	32	2.75	70	6.69	170	3.77	1.71	10
2	50	4.56	116	3.00	76	1.50	38	2.97	75	6.69	170	5.78	2.62	10
2½	65	6.16	156	4.00	102	2.00	51	3.63	92	6.69	170	10.75	4.88	4
3	80	6.90	175	5.00	127	2.50	64	4.09	104	8.00	203	19.14	8.68	2

†NIBCO supplies full port T-595-Y-UL on this size.

NIBCO INC. WORLD HEADQUARTERS • 1516 MIDDLEBURY ST. • ELKHART, IN 46516-4740 • USA • PH: 1.800.234.0227
TECH SERVICES PH: 1.888.446.4226 • FAX: 1.888.336.4226 • INTERNATIONAL OFFICE PH: +1.574.295.3327 • FAX: +1.574.295.3455
www.nibco.com

Bronze Ball Valves

Dezincification Resistant

Three-Piece Body • Conventional Port • Grooved Ends • Bronze Trim • Blowout-Proof Stem

600 PSI/41.4 Bar Non-Shock Cold Working Pressure

G-590-Y
Grooved

CONFORMS TO MSS SP-110

MATERIAL LIST

	PART	SPECIFICATION
1.	Handle Nut	Zinc Plated Steel
2.	Handle	Zinc Plated Steel Clear Chromate Plastisol Coated
3.	Threaded Pack Gland	Brass ASTM B 16 Alloy C36000
4.	Stem	Silicon Bronze ASTM B 371 Alloy C69430 or ASTM B 99 Alloy C65100
5.	Body	Bronze ASTM B 584 Alloy C84400
6.	Packing	PTFE
7.	Body End (2)	Bronze ASTM B 584 Alloy C84400
8.	O-Ring Seal (2)	Fluorocarbon Rubber
9.	Seat Ring (2)	PTFE
10.	Ball	Brass ASTM B 124 Alloy C37700 or ASTM B16 Alloy C36000 EACH with Hard Chrome Plate
11.	Thrust Washer	Reinforced PTFE
12.	Body Bolts	Zinc Dichromate Plated Steel ASTM A 449 Grade 5
13.	Body Nuts	Zinc Dichromate Plated Steel ASTM A 449 Grade 5

Note: Valves are static grounded by a grounding washer. (Not Shown)

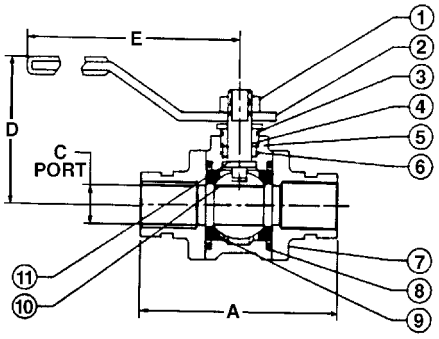

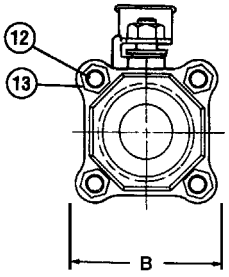

G-590-Y
GRVD x GRVD

DIMENSIONS—WEIGHTS—QUANTITIES

Size		Dimensions A		B		C		D		E		G-590-Y		Master
In.	mm.	In.	mm.	In.	mm.	In.	mm.	In.	mm.	In.	mm.	Lbs.	Kg.	Ctn. Qty.
1½	40	5.37	144	2.37	68	1.25	32	2.75	70	6.69	170	4.20	1.91	10
2	50	5.87	149	3.00	76	1.50	38	2.97	75	6.69	170	6.14	2.79	10
2½	65	6.64	169	4.00	102	2.00	51	3.62	92	6.69	170	10.80	4.91	4
3	80	7.78	198	5.00	127	2.50	64	4.09	104	6.69	170	19.01	8.64	2

Bronze Ball Valves

Dezincification Resistant

Three-Piece Body • Conventional Port • Grooved Ends • 316SS Trim • Blowout-Proof Stem • Vented Ball

600 PSI/41.4 Bar Non-Shock Cold Working Pressure

G-590-Y-66
Grooved

CONFORMS TO MSS SP-110

MATERIAL LIST

	PART	SPECIFICATION
1.	Handle Nut	Stainless Steel 300 Series
2.	Handle	Zinc Plated Steel Clear Chromate Plastisol Coated
3.	Threaded Pack Gland	Brass ASTM B 16 Alloy C36000
4.	Stem	Stainless Steel ASTM A 276 Type 316
5.	Body	Bronze ASTM B 584 Alloy C84400
6.	Packing	PTFE
7.	Body End (2)	Bronze ASTM B 584 Alloy C84400
8.	O-Ring Seal (2)	Fluorocarbon Rubber
9.	Seat Ring (2)	PTFE
10.	Ball (Vented)	Stainless Steel ASTM A 276 Type 316 or ASTM A 351 Type CF8M
11.	Thrust Washer	Reinforced PTFE
12.	Body Bolts	Zinc Dichromate Plated Steel ASTM A 449 Grade 5
13.	Body Nuts	Zinc Dichromate Plated Steel ASTM A 449 Grade 5

Note: Valves are static grounded by a grounding washer. (Not Shown)

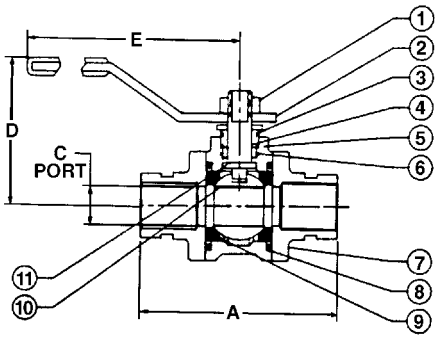

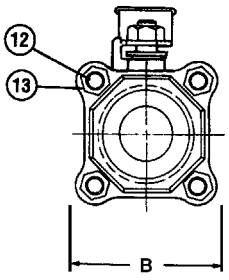

G-590-Y-66
GRVD x GRVD

DIMENSIONS—WEIGHTS—QUANTITIES

Size		Dimensions A		B		C		D		E		G-590-Y-66		Master
In.	mm.	In.	mm.	In.	mm.	In.	mm.	In.	mm.	In.	mm.	Lbs.	Kg.	Ctn. Qty.
1 ½	40	5.37	144	2.37	68	1.25	32	2.75	70	6.69	170	4.20	1.91	10
2	50	5.87	149	3.00	76	1.50	38	2.97	75	6.69	170	6.14	2.79	10
2 ½	65	6.64	169	4.00	102	2.00	51	3.62	92	6.69	170	10.80	4.91	4
3	80	7.78	198	5.00	127	2.50	64	4.09	104	6.69	170	19.01	8.64	2

NIBCO INC. WORLD HEADQUARTERS • 1516 MIDDLEBURY ST. • ELKHART, IN 46516-4740 • USA • PH: 1.800.234.0227
TECH SERVICES PH: 1.888.446.4226 • FAX: 1.888.336.4226 • INTERNATIONAL OFFICE PH: +1.574.295.3327 • FAX: +1.574.295.3455
www.nibco.com

Bronze Ball Valves

Three-Piece Body • Full Port • Bronze Trim • Blowout-Proof Stem

Dezincification Resistant

600 PSI/41.4 Bar Non-Shock Cold Working Pressure
150 PSI/10.3 Bar Saturated Steam◆

CONFORMS TO MSS SP-110

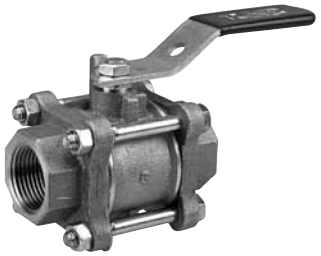

T-595-Y
Threaded

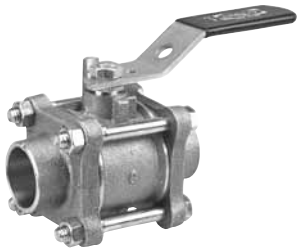

S-595-Y
Solder

MATERIAL LIST

	PART	SPECIFICATION
1.	Handle Nut	Zinc Plated Steel
2.	Handle	Zinc Plated Steel Clear Chromate Plastisol Coated
3.	Threaded Pack Gland	Brass ASTM B 16 Alloy C36000
4.	Stem	Silicon Bronze ASTM B 371 Alloy C69430 or ASTM B 99 Alloy C65100
5.	Body	Bronze ASTM B 584 Alloy C84400
6.	Packing	PTFE
7.	Body End (2)	Bronze ASTM B 584 Alloy C84400
8.	O-Ring Seal (2)	Fluorocarbon Rubber
9.	Seat Ring (2)	PTFE
10.	Ball	Brass ASTM B 124 Alloy C37700 or ASTM B16 Alloy C36000 EACH with Hard Chrome Plate
11.	Thrust Washer	Reinforced PTFE
12.	Body Bolts	Zinc Dichromate Plated Steel ASTM A 449 Grade 5
13.	Body Nuts	Zinc Dichromate Plated Steel ASTM A 449 Grade 5

Note: Valves are static grounded by a grounding washer. (Not Shown)

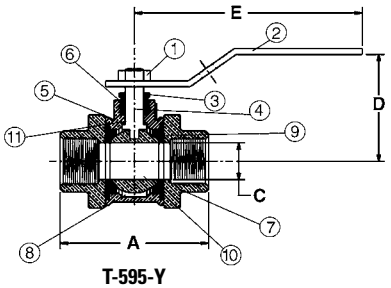

T-595-Y
NPT x NPT

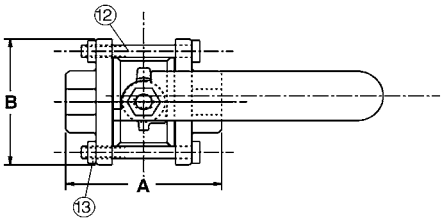

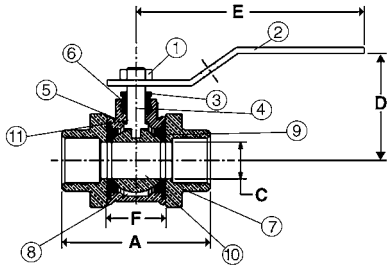

S-595-Y
C x C

DIMENSIONS—WEIGHTS—QUANTITIES

Size		T-595-Y A		S-595-Y A		Dimensions B		C		D		E		S-595-Y F		T-595-Y		S-595-Y		Master
In.	mm.	In.	mm.	In.	mm.	In.	mm.	In.	mm.	In.	mm.	In.	mm.	In.	mm.	Lbs.	Kg.	Lbs.	Kg.	Ctn. Qty.
¼	8	2.50	64	1.69	43	1.81	46	.38	10	1.69	43	3.91	99	1.13	29	1.03	.47	.89	.40	50
⅜	10	2.50	64	1.81	46	1.81	46	.38	10	1.69	43	3.91	99	1.13	29	.98	.44	.89	.40	50
½	15	2.50	64	2.06	52	1.81	46	.50	13	1.69	43	3.91	99	1.13	29	1.03	.47	.89	.40	50
¾	20	3.00	76	2.94	75	1.94	49	.75	19	2.00	51	4.66	118	1.44	37	1.70	.77	1.59	.72	30
1	25	3.69	94	3.66	93	2.50	64	1.00	25	2.25	57	4.66	118	1.84	47	2.82	1.28	2.55	1.15	20
1¼	32	4.09	104	3.91	99	2.69	68	1.25	32	2.75	70	6.69	170	1.97	50	3.96	1.80	3.61	1.64	10
1½	40	4.56	116	4.60	117	3.00	76	1.50	38	2.97	75	6.69	170	2.38	60	5.68	2.57	5.31	2.41	10
2	50	6.16	156	5.78	147	4.00	102	2.00	51	3.63	92	6.69	170	3.06	78	11.40	5.17	10.60	4.81	4
2½	65	6.84	174	6.94	176	5.00	127	2.50	64	4.09	104	8.00	203	4.00	102	21.07	9.56	19.30	8.75	2

◆For detailed Operating Pressure, refer to Pressure Temperature Chart on page 41.

Bronze Ball Valves

Dezincification Resistant

Three-Piece Body • Full Port • Bronze Trim • 300 Series External Trim • Blowout-Proof Stem

600 PSI/41.4 Bar Non-Shock Cold Working Pressure
150 PSI/10.3 Bar Saturated Steam◆

CONFORMS TO MSS SP-110

MATERIAL LIST

	PART	SPECIFICATION
1.	Handle Nut	300 Series Stainless Steel
2.	Handle	300 Series Stainless Steel with Plastisol Grip
3.	Threaded Pack Gland	Brass ASTM B 16 Alloy C36000
4.	Stem	Silicon Bronze ASTM B 371 Alloy C69430 or ASTM B 99 Alloy C65100
5.	Body	Bronze ASTM B 584 Alloy C84400
6.	Packing	PTFE
7.	Body End (2)	Bronze ASTM B 584 Alloy C84400
8.	O-Ring Seal (2)	Fluorocarbon Rubber
9.	Seat Ring (2)	PTFE
10.	Ball	Brass ASTM B 124 Alloy C37700 or ASTM B 16 Alloy C36000 with Hard Chrome Plate
11.	Thrust Washer	Reinforced PTFE
12.	Body Bolts	300 Series Stainless Steel
13.	Body Nuts	300 Series Stainless Steel

Note: Valves are static grounded by a grounding washer. (Not Shown)

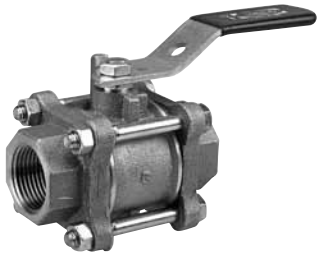

T-595-Y-SS
Threaded

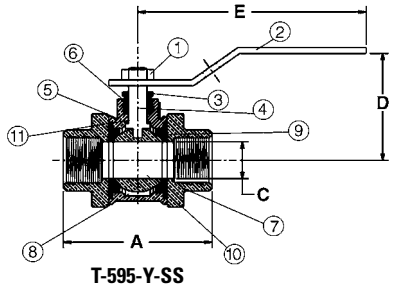

T-595-Y-SS
NPT x NPT

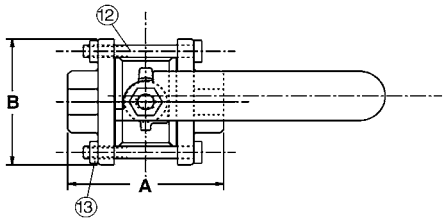

DIMENSIONS—WEIGHTS—QUANTITIES

Size		Dimensions A		B		C		D		E		T-595-Y-SS		Master
In.	mm.	In.	mm.	In.	mm.	In.	mm.	In.	mm.	In.	mm.	Lbs.	Kg.	Ctn. Qty.
¼	8	2.50	64	1.81	46	.38	10	1.69	43	3.91	99	1.03	.47	50
⅜	10	2.50	64	1.81	46	.38	10	1.69	43	3.91	99	.98	.44	50
½	15	2.50	64	1.81	46	.50	13	1.69	43	3.91	99	1.03	.47	50
¾	20	3.00	76	1.94	49	.75	19	2.00	51	4.66	118	1.70	.77	30
1	25	3.69	94	2.50	64	1.00	25	2.25	57	4.66	118	2.82	1.28	20
1¼	32	4.09	104	2.69	68	1.25	32	2.75	70	6.69	170	3.96	1.80	10
1½	40	4.56	116	3.00	76	1.50	38	2.97	75	6.69	170	5.68	2.57	10
2	50	6.16	156	4.00	102	2.00	51	3.63	92	6.69	170	11.40	5.17	4
2½	65	6.84	174	5.00	127	2.50	64	4.09	104	8.00	203	21.07	9.56	2

◆For detailed Operating Pressure, refer to Pressure Temperature Chart on page 41.

NIBCO INC. WORLD HEADQUARTERS • 1516 MIDDLEBURY ST. • ELKHART, IN 46516-4740 • USA • PH: 1.800.234.0227
TECH SERVICES PH: 1.888.446.4226 • FAX: 1.888.336.4226 • INTERNATIONAL OFFICE PH: +1.574.295.3327 • FAX: +1.574.295.3455
www.nibco.com

Bronze Ball Valves

Dezincification Resistant

Three-Piece Body • Full Port • 316SS Trim • Blowout-Proof Stem • Vented Ball

600 PSI/41.4 Bar Non-Shock Cold Working Pressure
150 PSI/10.3 Bar Saturated Steam◆

CONFORMS TO MSS SP-110

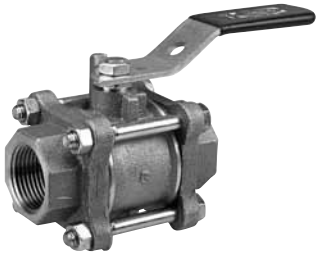

T-595-Y-66
Threaded

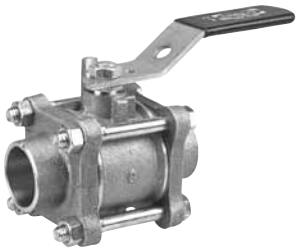

S-595-Y-66
Solder

MATERIAL LIST

	PART	SPECIFICATION
1.	Handle Nut	Stainless Steel 300 Series
2.	Handle	Zinc Plated Steel Clear Chromate Plastisol Coated
3.	Threaded Pack Gland	Brass ASTM B 16 Alloy C36000
4.	Stem	Stainless Steel ASTM A 276 Type 316
5.	Body	Bronze ASTM B 584 Alloy C84400
6.	Packing	PTFE
7.	Body End (2)	Cast Bronze ASTM B 584 Alloy C84400
8.	O-Ring Seal (2)	Fluorocarbon Rubber
9.	Seat Ring (2)	PTFE
10.	Ball (Vented)	Stainless Steel ASTM A 276 Type 316 or ASTM A 351 Type CF8M
11.	Thrust Washer	Reinforced PTFE
12.	Body Bolts	Zinc Dichromate Plated Steel ASTM A 449 Grade 5
13.	Body Nuts	Zinc Dichromate Plated Steel ASTM A 449 Grade 5

Note: Valves are static grounded by a grounding washer. (Not Shown)

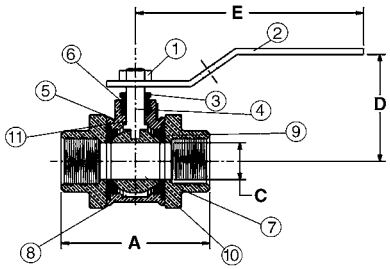

T-595-Y-66
NPT x NPT

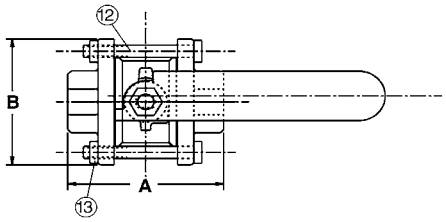

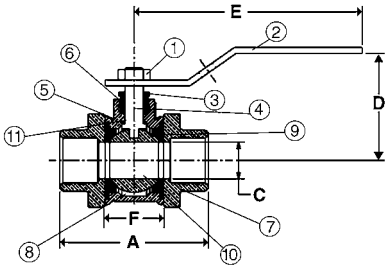

S-595-Y-66
C x C

DIMENSIONS—WEIGHTS—QUANTITIES

Size		T-595-Y-66 A		S-595-Y-66 A		Dimensions B		C		D		E		F		T-595-Y-66		S-595-Y-66		Master
In.	mm.	In.	mm.	In.	mm.	In.	mm.	In.	mm.	In.	mm.	In.	mm.	In.	mm.	Lbs.	Kg.	Lbs.	Kg.	Ctn. Qty.
¼	8	2.50	64	1.69	43	1.81	46	.38	10	1.69	43	3.91	99	1.13	29	1.03	.47	.89	.40	50
⅜	10	2.50	64	1.81	46	1.81	46	.38	10	1.69	43	3.91	99	1.13	29	.98	.44	.89	.40	50
½	15	2.50	64	2.06	52	1.81	46	.50	13	1.69	43	3.91	99	1.13	29	1.03	.47	.89	.40	50
¾	20	3.00	76	2.94	75	1.94	49	.75	19	2.00	51	4.66	118	1.44	37	1.70	.77	1.59	.72	30
1	25	3.69	94	3.66	93	2.50	64	1.00	25	2.25	57	4.66	118	1.84	47	2.82	1.28	2.55	1.15	20
1 ¼	32	4.09	104	3.91	99	2.69	68	1.25	32	2.75	70	6.69	170	1.97	50	3.96	1.80	3.61	1.64	10
1 ½	40	4.56	116	4.60	117	3.00	76	1.50	38	2.97	75	6.69	170	2.38	60	5.68	2.57	5.31	2.41	10
2	50	6.16	156	5.78	147	4.00	102	2.00	51	3.63	92	6.69	170	3.06	78	11.40	5.17	10.60	4.81	4
2 ½	65	6.84	174	6.94	176	5.00	127	2.50	64	4.09	104	8.00	203	4.00	102	21.07	9.56	19.30	8.75	2

◆For detailed Operating Pressure, refer to Pressure Temperature Chart on page 41.

Bronze Ball Valves

Dezincification Resistant

Three-Piece Body • Full Port • 316SS Internal Trim • 300 Series External Trim • Blowout-Proof Stem • Vented Ball

600 PSI/41.4 Bar Non-Shock Cold Working Pressure
150 PSI/10.3 Bar Saturated Steam◆

CONFORMS TO MSS SP-110

MATERIAL LIST

	PART	SPECIFICATION
1.	Handle Nut	300 Series Stainless Steel
2.	Handle	300 Series Stainless Steel with Plastisol Grip
3.	Threaded Pack Gland	Brass ASTM B 16 Alloy C36000
4.	Stem	Stainless Steel ASTM A 276 Type 316
5.	Body	Bronze ASTM B 584 Alloy C84400
6.	Packing	PTFE
7.	Body End (2)	Cast Bronze ASTM B 584 Alloy C84400
8.	O-Ring Seal (2)	Fluorocarbon Rubber
9.	Seat Ring (2)	PTFE
10.	Ball (Vented)	Stainless Steel ASTM A 276 Type 316 or ASTM A 351 Type CF8M
11.	Thrust Washer	Reinforced PTFE
12.	Body Bolts	300 Series Stainless Steel
13.	Body Nuts	300 Series Stainless Steel

Note: Valves are static grounded by a grounding washer. (Not Shown)

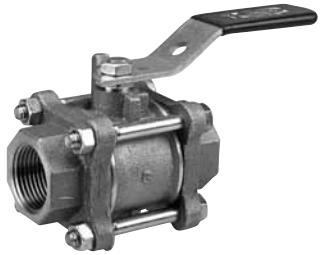

T-595-Y-66-SS
Threaded

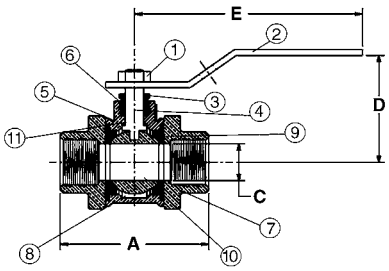

T-595-Y-66-SS
NPT x NPT

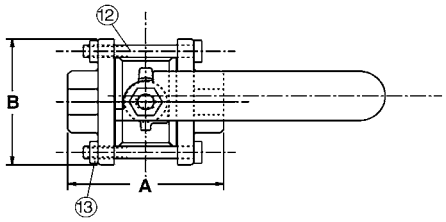

DIMENSIONS—WEIGHTS—QUANTITIES

Size		Dimensions A		B		C		D		E		T-595-Y-66-SS		Master
In.	mm.	In.	mm.	In.	mm.	In.	mm.	In.	mm.	In.	mm.	Lbs.	Kg.	Ctn. Qty.
¼	8	2.50	64	1.81	46	.38	10	1.69	43	3.91	99	1.03	.47	50
⅜	10	2.50	64	1.81	46	.38	10	1.69	43	3.91	99	.98	.44	50
½	15	2.50	64	1.81	46	.50	13	1.69	43	3.91	99	1.03	.47	50
¾	20	3.00	76	1.94	49	.75	19	2.00	51	4.66	118	1.70	.77	30
1	25	3.69	94	2.50	64	1.00	25	2.25	57	4.66	118	2.82	1.28	20
1 ¼	32	4.09	104	2.69	68	1.25	32	2.75	70	6.69	170	3.96	1.80	10
1 ½	40	4.56	116	3.00	76	1.50	38	2.97	75	6.69	170	5.68	2.57	10
2	50	6.16	156	4.00	102	2.00	51	3.63	92	6.69	170	11.40	5.17	4
2 ½	65	6.84	174	5.00	127	2.50	64	4.09	104	8.00	203	21.07	9.56	2

◆For detailed Operating Pressure, refer to Pressure Temperature Chart on page 41.

NIBCO INC. WORLD HEADQUARTERS • 1516 MIDDLEBURY ST. • ELKHART, IN 46516-4740 • USA • PH: 1.800.234.0227
TECH SERVICES PH: 1.888.446.4226 • FAX: 1.888.336.4226 • INTERNATIONAL OFFICE PH: +1.574.295.3327 • FAX: +1.574.295.3455
www.nibco.com

Bronze Ball Valves

Dezincification Resistant

Three-Piece Body • Full Port • Thread x Solder End Connections • Blowout-Proof Stem

600 PSI/41.4 Bar Non-Shock Cold Working Pressure
150 PSI/10.3 Bar Saturated Steam◆

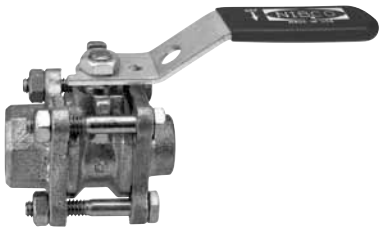

TS-595-Y
Threaded x Solder

CONFORMS TO MSS SP-110

MATERIAL LIST

	PART	SPECIFICATION
1.	Handle Nut	Zinc Plated Steel
2.	Handle	Zinc Plated Steel Clear Chromate Plastisol Coated
3.	Threaded Pack Gland	Brass ASTM B 16 Alloy C36000
4.	Stem	Silicon Bronze ASTM B 371 Alloy C69430 or ASTM B 99 Alloy C65100
5.	Packing	PTFE
6.	Thrust Washer	Reinforced PTFE
7.	O-Ring Seal (2)	Fluorocarbon Rubber
8.	Seat Ring (2)	PTFE
9.	Ball	Brass ASTM B 124 Alloy C37700 or ASTM B16 Alloy C36000 EACH with Hard Chrome Plate
10.	Solder Body End	Cast Bronze ASTM B 584 Alloy C84400
11.	Body	Bronze ASTM B 584 Alloy C84400
12.	Threaded Body End	Bronze ASTM B 584 Alloy C84400
13.	Body Bolts (4)	Zinc Dichromate Plated Steel ASTM A 449 Grade 5
14.	Body Nuts (4)	Zinc Dichromate Plated Steel

Note: Valves are static grounded by a grounding washer. (Not Shown)

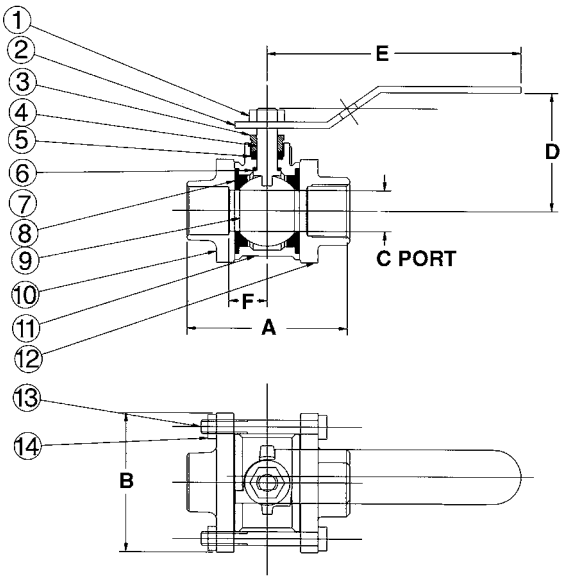

TS-595-Y
C x NPT

DIMENSIONS—WEIGHTS—QUANTITIES

Size		Dimensions A		B		C		D		E		F		TS-595-Y		Box	Master
In.	mm.	In.	mm.	In.	mm.	In.	mm.	In.	mm.	In.	mm.	In.	mm.	Lbs.	Kg.	Qty.	Ctn. Qty.
¼	8	2.09	53	1.81	46	.38	10	1.69	43	3.90	99	.56	14	.94	.43	5	50
⅜	10	2.16	55	1.81	46	.38	10	1.69	43	3.90	99	.56	14	.94	.43	5	50
½	15	2.28	58	1.81	46	.50	13	1.69	43	3.90	99	.56	14	1.01	.47	5	50
¾	20	2.97	75	1.94	49	.75	19	2.00	51	4.66	118	.72	18	1.73	.79	5	30
1	25	3.67	93	2.50	64	1.00	25	2.25	57	4.66	118	.92	23	2.75	1.25	5	20
1 ¼	32	3.97	101	2.69	68	1.25	32	2.75	70	6.69	170	.98	24	3.90	1.77	2	10
1 ½	40	4.57	116	3.00	76	1.50	38	2.97	75	6.69	170	1.19	30	5.50	2.49	2	10
2	50	5.97	152	4.00	102	2.00	51	3.63	92	6.69	170	1.54	39	10.27	4.66	2	4

◆For detailed Operating Pressure, refer to Pressure Temperature Chart on page 41.

Bronze Ball Valves

Dezincification Resistant

Three-Piece Body • Full Port • Grooved End • Bronze Trim • Blowout-Proof Stem

600 PSI/41.4 Bar Non-Shock Cold Working Pressure

G-595-Y
Grooved

CONFORMS TO MSS SP-110

MATERIAL LIST

	PART	SPECIFICATION
1.	Handle Nut	Zinc Plated Steel
2.	Handle	Zinc Plated Steel Clear Chromate Plastisol Coated
3.	Threaded Pack Gland	Brass ASTM B 16 Alloy C36000
4.	Stem	Silicon Bronze ASTM B 371 Alloy C69430 or ASTM B 99 Alloy C65100
5.	Body	Bronze ASTM B 584 Alloy C84400
6.	Packing	PTFE
7.	Body End (2)	Bronze ASTM B 584 Alloy C84400
8.	O-Ring Seal (2)	Fluorocarbon Rubber
9.	Seat Ring (2)	PTFE
10.	Ball	Brass ASTM B 124 Alloy C37700 or ASTM B16 Alloy C36000 EACH with Hard Chrome Plate
11.	Thrust Washer	Reinforced PTFE
12.	Body Bolts	Zinc Dichromate Plated Steel ASTM A 449 Grade 5
13.	Body Nuts	Zinc Dichromate Plated Steel ASTM A 449 Grade 5

Note: Valves are static grounded by a grounding washer. (Not Shown)

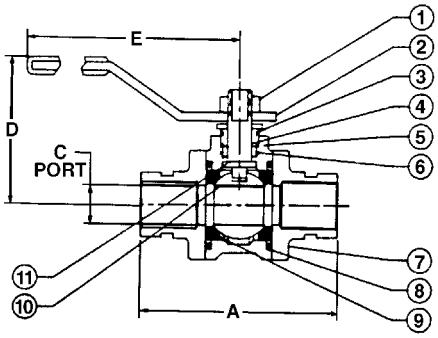

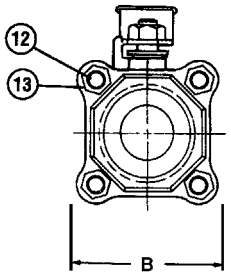

G-595-Y
GRVD x GRVD

DIMENSIONS—WEIGHTS—QUANTITIES

Size		Dimensions A		B		C		D		E		G-595-Y		Master
In.	mm.	In.	mm.	In.	mm.	In.	mm.	In.	mm.	In.	mm.	Lbs.	Kg.	Ctn. Qty.
1 ½	40	5.87	149	3.00	76	1.50	38	2.97	75	6.69	170	6.02	2.73	10
2	50	6.64	169	4.00	102	2.00	51	3.63	92	6.69	170	10.48	4.76	4
2 ½	65	7.78	198	5.00	127	2.50	64	4.09	104	8.00	203	18.30	8.30	2

NIBCO INC. WORLD HEADQUARTERS • 1516 MIDDLEBURY ST. • ELKHART, IN 46516-4740 • USA • PH: 1.800.234.0227
TECH SERVICES PH: 1.888.446.4226 • FAX: 1.888.336.4226 • INTERNATIONAL OFFICE PH: +1.574.295.3327 • FAX: +1.574.295.3455
www.nibco.com

Bronze Ball Valves

Dezincification Resistant

Three-Piece Body • Full Port • Grooved End • 316SS Trim • Blowout-Proof Stem • Vented Ball

600 PSI/41.4 Bar Non-Shock Cold Working Pressure

G-595-Y-66
Grooved

CONFORMS TO MSS SP-110

MATERIAL LIST

	PART	SPECIFICATION
1.	Handle Nut	Stainless Steel 300 Series
2.	Handle	Zinc Plated Steel Clear Chromate Plastisol Coated
3.	Threaded Pack Gland	Brass ASTM B 16 Alloy C36000
4.	Stem	Stainless Steel ASTM A 276 Type 316
5.	Body	Bronze ASTM B 584 Alloy C84400
6.	Packing	PTFE
7.	Body End (2)	Cast Bronze ASTM B 584 Alloy C84400
8.	O-Ring Seal (2)	Fluorocarbon Rubber
9.	Seat Ring (2)	PTFE
10.	Ball (Vented)	Stainless Steel ASTM A 276 Type 316 or ASTM A 351 Type CF8M
11.	Thrust Washer	Reinforced PTFE
12.	Body Bolts	Zinc Dichromate Plated Steel ASTM A 449 Grade 5
13.	Body Nuts	Zinc Dichromate Plated Steel ASTM A 449 Grade 5

Note: Valves are static grounded by a grounding washer. (Not Shown)

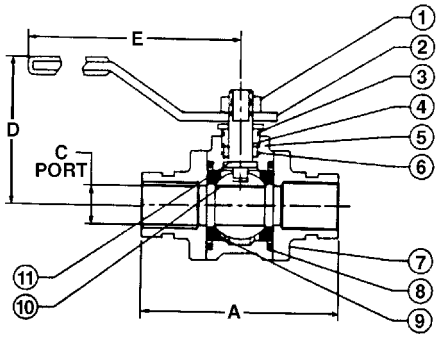

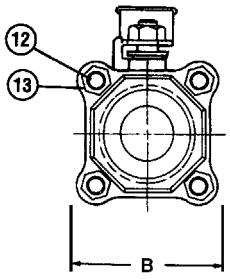

G-595-Y-66
GRVD x GRVD

DIMENSIONS—WEIGHTS—QUANTITIES

Size		Dimensions A		B		C		D		E		G-595-Y-66		Master
In.	mm.	In.	mm.	In.	mm.	In.	mm.	In.	mm.	In.	mm.	Lbs.	Kg.	Ctn. Qty.
1 ½	40	5.87	149	3.00	76	1.50	38	2.97	75	6.69	170	6.02	2.73	10
2	50	6.64	169	4.00	102	2.00	51	3.63	92	6.69	170	10.48	4.76	4
2 ½	65	7.78	198	5.00	127	2.50	64	4.09	104	8.00	203	18.30	8.30	2

Bronze Ball Valves

Dezincification Resistant

Three-Piece Body • Full Port ¼"-2" • UL Listed for Flammable Liquids and LP Gas • Blowout-Proof Stem

175 PSI/12.1 Bar Non-Shock LP Gas per UL842

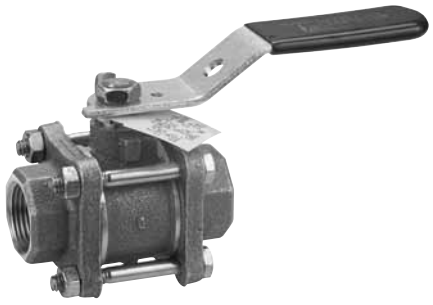

T-595-Y-UL
Threaded

CONFORMS TO MSS SP-110 • UL842

MATERIAL LIST

	PART	SPECIFICATION
1.	Handle Nut	Zinc Plated Steel
2.	Handle	Zinc Plated Steel Clear Chromate Plastisol Coated
3.	Threaded Pack Gland	Brass ASTM B 16 Alloy C36000
4.	Stem	Silicon Bronze ASTM B 371 Alloy C69400 or ASTM B 99 Alloy C65100
5.	Body	Bronze ASTM B 584 Alloy C84400
6.	Packing	PTFE
7.	Body End (2)	Bronze ASTM B 584 Alloy C84400
8.	O-Ring Seal (2)	Fluorocarbon Rubber
9.	Seat Ring (2)	PTFE
10.	Ball	Brass ASTM B 124 Alloy C37700 or ASTM B16 Alloy C36000 EACH with Hard Chrome Plate
11.	Thrust Washer	Reinforced PTFE
12.	Body Bolts	Zinc Dichromate Plated Steel ASTM A 449 Grade 5
13.	Body Nuts	Zinc Dichromate Plated Steel ASTM A 449 Grade 5

Note: Valves are static grounded by a grounding washer. (Not Shown)

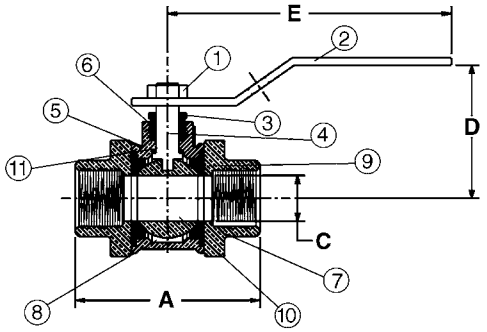

UL Listed For:
YQNZ Compressed gas shut-off
YRPV Gas shut-off
YRBX Flammable liquid shut-off
MHKZ Manual valves

Service
A - Air or non-toxic, non-flammable gas
G - City gas supplied by public utilities
GA - Gasoline
LP - Liquified petroleum gas, 175 PSI max.
02 - No. 1 and 2 fuel oil
04 - No. 4 fuel oil
05 - No. 5 fuel oil
06 - No. 6 fuel oil

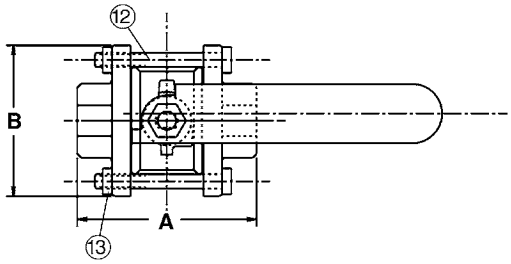

T-595-Y-UL
NPT x NPT

DIMENSIONS—WEIGHTS—QUANTITIES

Size		Dimensions A		B		C		D		E		T-595-Y-UL		Master
In.	mm.	In.	mm.	In.	mm.	In.	mm.	In.	mm.	In.	mm.	Lbs.	Kg.	Ctn. Qty.
¼	8	2.50	64	1.81	46	.38	10	1.69	43	3.90	99	.94	.43	50
⅜	10	2.50	64	1.81	46	.38	10	1.69	43	3.90	99	.94	.43	50
½	15	2.50	64	1.81	46	.50	13	1.69	43	3.90	99	1.01	.47	50
¾	20	3.00	76	1.94	49	.75	19	2.00	51	4.66	118	1.73	.79	30
1	25	3.69	94	2.50	64	1.00	25	2.25	57	4.66	118	2.75	1.25	20
1¼	32	4.09	104	2.69	68	1.25	32	2.75	70	6.69	170	3.90	1.77	10
1½	40	4.56	116	3.00	76	1.50	38	2.97	75	6.69	170	5.50	2.49	10
2	50	6.16	156	4.00	102	2.00	51	3.63	92	6.69	170	10.27	4.66	4

NIBCO INC. WORLD HEADQUARTERS • 1516 MIDDLEBURY ST. • ELKHART, IN 46516-4740 • USA • PH: 1.800.234.0227
TECH SERVICES PH: 1.888.446.4226 • FAX: 1.888.336.4226 • INTERNATIONAL OFFICE PH: +1.574.295.3327 • FAX: +1.574.295.3455
www.nibco.com

Bronze Ball Valves

Dezincification Resistant

Three-Piece Body • Full Port • Copper Stub Ends • Type K (Straight) • Type L (Expanded) • Cleaned and Bagged for OX Service • Bronze Trim • Blowout-Proof Stem

600 PSI/41.4 Bar Non-Shock Cold Working Pressure
200 PSI/13.8 Bar for Medical Gas

CONFORMS TO MSS SP-110

MATERIAL LIST

	PART	SPECIFICATION
1.	Handle Nut	Zinc Plated Steel
2.	Handle	Zinc Plated Steel Clear Chromate Plastisol Coated
3.	Threaded Pack Gland	Brass ASTM B 16 Alloy C36000
4.	Stem	Silicon Bronze ASTM B 371 Alloy C69430 or ASTM B 99 Alloy C65100
5.	Body	Bronze ASTM B 584 Alloy C84400
6.	Packing	PTFE
7.	Body End (2)	Bronze ASTM B 584 Alloy C84400
8.	O-Ring Seal (2)	Fluoroelastomer Rubber
9.	Seat Ring (2)	PTFE
10.	Ball	Brass ASTM B 124 Alloy C37700 or ASTM B16 Alloy C36000 EACH with Hard Chrome Plate
11.	Ground Washer	Stainless Steel ASTM A 167 Type 304
12.	Thrust Washer	Reinforced PTFE
13.	Body Bolts	Zinc Dichromate Plated Steel ASTM A 449 Grade 5
14.	Body Nuts	Zinc Dichromate Plated Steel ASTM A 449 Grade 5
15.	Straight Stub Out (2)	6" Copper Tube Type K
16.	Expanded Stub Out (2)	6" Copper Tube Type L (Specify EC)

Note: Valves are static grounded by a grounding washer. (Not Shown)

CS-595-YX-EC
Copper Stub Ends

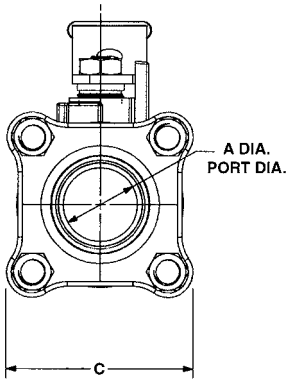

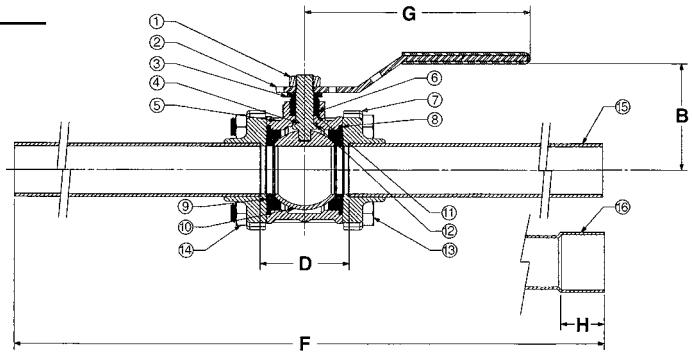

CS-595-YX/CS-595-YX-EC
CSE x CSE

Testing
The CS-595-YX series are tested to MSS SP-110. For applications that require a 150 PSI dry nitrogen test, please contact NIBCO Technical Services for pricing and availability.
MSS SP-110 Test parameters are as follows:
Shell Test = 80 PSI air under water for 5 seconds or 1.5 x CWP hydrostatic for 15 seconds.
Seat Test = 80 PSI air under water for 5 seconds or 1.1 CWP hydrostatic for 15 seconds.

Oxygen Cleaning
NIBCO's internal cleaning procedure for cleaned and bagged bronze ball valves meets the requirements of NFPA99 and CGA Pamphlet G-4-1.

DIMENSIONS—WEIGHTS—QUANTITIES

Size		Dimensions														CS-595-YX/EC		Master
		A		B		C		D		F		G		H				
In.	mm.	In.	mm.	In.	mm.	In.	mm.	In.	mm.	In.	mm.	In.	mm.	In.	mm.	Lbs.	Kg.	Ctn. Qty.
½	15	.50	13	1.69	43	1.81	46	1.11	28	13.11	333	3.91	99	.50	13	1.22	.55	10
¾	20	.75	19	2.00	51	1.94	50	1.41	36	13.41	341	4.66	118	.75	19	2.25	1.02	10
1	25	1.00	25	2.25	57	2.50	64	1.81	46	13.81	351	4.66	118	.91	23	3.23	1.47	10
1 ¼	32	1.25	32	2.75	70	2.69	68	1.96	50	13.96	355	6.69	170	.97	25	4.41	2.00	4
1 ½	40	1.50	38	2.97	75	3.00	76	2.39	61	14.39	366	6.69	170	1.09	28	6.61	3.00	4
2	50	2.00	51	3.63	92	4.00	102	3.04	77	15.04	382	6.69	170	1.34	34	11.67	5.29	4

Bronze Ball Valves

Dezincification Resistant

Three-Piece Body • Full Port • 6" Copper Stub Ends • Type K (Straight) • Type L (Expanded) • Cleaned and Bagged for OX Service • 316SS Trim • Blowout-Proof

600 PSI/41.4 Bar Non-Shock Cold Working Pressure
200 PSI/13.8 Bar for Medical Gas

CS-595-YX-66-EC
(316SS Trim)
Copper Stub Ends

CONFORMS TO MSS SP-110

MATERIAL LIST

	PART	SPECIFICATION
1.	Handle Nut	Zinc Plated Steel
2.	Handle	Zinc Plated Steel Clear Chromate Plastisol Coated
3.	Threaded Pack Gland	Brass ASTM B 16 Alloy C36000
4.	Stem	Stainless Steel ASTM A 276 Type 316
5.	Body	Bronze ASTM B 584 Alloy C84400
6.	Packing	PTFE
7.	Body End (2)	Bronze ASTM B 584 Alloy C84400
8.	O-Ring Seal (2)	Fluoroelastomer Rubber
9.	Seat Ring (2)	PTFE
10.	Ball	Stainless Steel ASTM A 276 Type 316 or ASTM A 351 Type CF8M
11.	Ground Washer	Stainless Steel ASTM A 167 Type 304
12.	Thrust Washer	Reinforced PTFE
13.	Body Bolts	Zinc Dichromate Plated Steel ASTM A 449 Grade 5
14.	Body Nuts	Zinc Dichromate Plated Steel ASTM A 449 Grade 5
15.	Straight Stub Out (2)	6" Copper Tube Type K
16.	Expanded Stub Out (2)	6" Copper Tube Type L (Specify EC)

Note: Valves are static grounded by a grounding washer. (Not Shown)

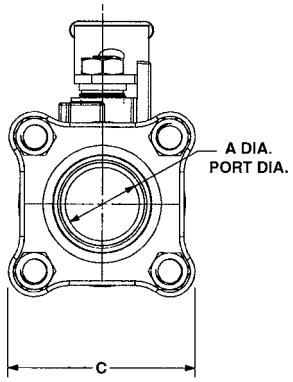

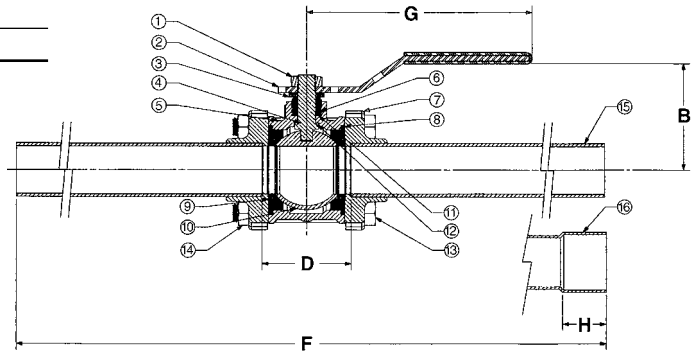

CS-595-YX-66/CS-595-YX-66-EC
CSE x CSE

Testing
The CS-595-YX series are tested to MSS SP-110. For applications that require a 150 PSI dry nitrogen test, please contact NIBCO Technical Services for pricing and availability.
MSS SP-110 Test parameters are as follows:
Shell Test = 80 PSI air under water for 5 seconds or 1.5 x CWP hydrostatic for 15 seconds.
Seat Test = 80 PSI air under water for 5 seconds or 1.1 CWP hydrostatic for 15 seconds.

Oxygen Cleaning
NIBCO's internal cleaning procedure for cleaned and bagged bronze ball valves meets the requirements of NFPA99 and CGA Pamphlet G-4-1.

DIMENSIONS—WEIGHTS—QUANTITIES

Size		Dimensions A		B		C		D		F		G		H		CS-595-YX-66/EC		Master
In.	mm.	In.	mm.	In.	mm.	In.	mm.	In.	mm.	In.	mm.	In.	mm.	In.	mm.	Lbs.	Kg.	Ctn. Qty.
½	15	.50	13	1.69	43	1.81	46	1.11	28	13.11	333	3.91	99	.50	13	1.22	.55	10
¾	20	.75	19	2.00	51	1.94	50	1.41	36	13.41	341	4.66	118	.75	19	2.25	1.02	10
1	25	1.00	25	2.25	57	2.50	64	1.81	46	13.81	351	4.66	118	.91	23	3.23	1.47	10
1 ¼	32	1.25	32	2.79	40	2.69	68	1.96	50	13.96	355	6.69	170	.97	25	4.41	2.00	4
1 ½	40	1.50	38	2.97	75	3.00	76	2.39	61	14.39	366	6.69	170	1.09	28	6.61	3.00	4
2	50	2.00	51	3.63	92	4.00	102	3.04	77	15.04	382	6.69	170	1.34	34	11.67	5.29	4

NIBCO INC. WORLD HEADQUARTERS • 1516 MIDDLEBURY ST. • ELKHART, IN 46516-4740 • USA • PH: 1.800.234.0227
TECH SERVICES PH: 1.888.446.4226 • FAX: 1.888.336.4226 • INTERNATIONAL OFFICE PH: +1.574.295.3327 • FAX: +1.574.295.3455
www.nibco.com

Pressure Temperature Ratings

Bronze Ball Valves

T-560-BR, T/S-580-70, and 585-70
Bronze Ball Valves with Reinforced PTFE Seats

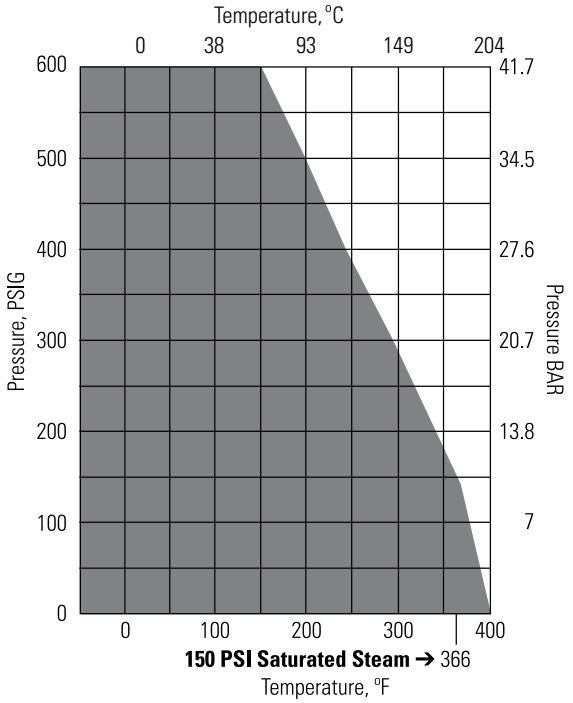

580 Bronze Ball Valves with PTFE Seats

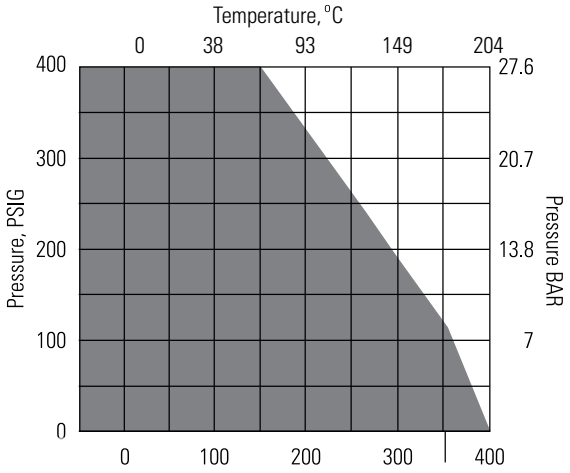

T-560-BR, 590, and 595
Bronze Ball Valves with Virgin PTFE Seats

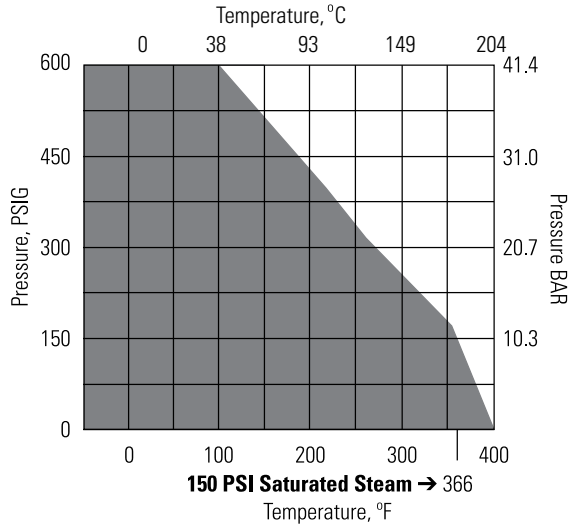

T-585-70-66-ST
Bronze Ball Valves with Carbon Filled PTFE Seats

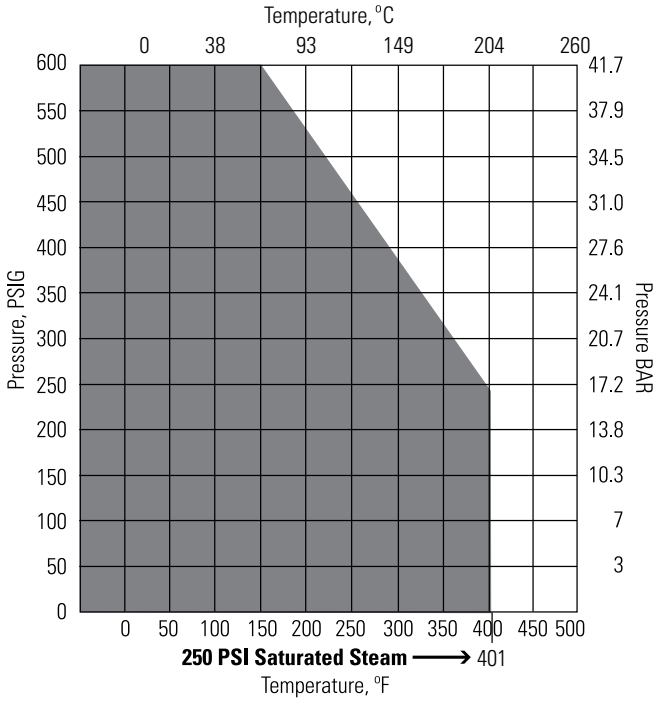

Shaded area refers to recommended seat rating.

***NIBCO recommends stainless steel trim where heat is a significant factor due to its hardness and pressure relief vented ball.**

Carbon Steel Ball Valves

One, Two, and Three-Piece Body
Threaded, Butt or Socket Weld Ends

Carbon Steel Ball Valve Figure Number Key

T-560-CS-R-25-**

End Connection	Valve Style	Basic Material	Seat Material	Trim Material	Options
K - Socket Weld	560 - One-Piece Body (Casting)	CS - Carbon Steel	Y - Virgin PTFE	25 - Carbon Steel	FS - Fire Safe
T - Threaded	570 - One-Piece Body (Bar Stock)	S6 - Stainless Steel	R - Reinforced PTFE	66 - Stainless Steel	OL - Oval Locking Hdle
TC - Threaded (Investment Cast Carbon Body)	580 - Two-Piece Body Conventional Port				LL - Locking Lever Hdle
BM - Butt Weld ISO Mount	585 - Two-Piece Body Full Port				OV - Oval Hdle
KM - Socket Weld ISO Mount	590 - Three-Piece Body Conventional Port				
TM - Threaded ISO Mount	595 - Three-Piece Body Full Port				

*** This key is a guide only and is not intended to infer that every valve combination will be produced.**

NIBCO INC. WORLD HEADQUARTERS • 1516 MIDDLEBURY ST. • ELKHART, IN 46516-4740 • USA • PH: 1.800.234.0227
TECH SERVICES PH: 1.888.446.4226 • FAX: 1.888.336.4226 • INTERNATIONAL OFFICE PH: +1.574.295.3327 • FAX: +1.574.295.3455
www.nibco.com

One, Two, and Three-Piece Carbon Steel Ball Valves Illustrated Index

One-Piece Carbon Steel Ball Valve
2000 lb. CWP

T-560-CS-R-25/66-FS
Sizes ¼" thru 2"
Threaded Ends
Pages 44-47

One-Piece Bar Stock Carbon Steel Ball Valve
2000 lb. CWP ½"-1"
1500 lb. CWP 1¼"-2"

T-570-CS-R-25/66
Sizes ½" thru 2"
Threaded Ends
Page 48, 49

Two-Piece Carbon Steel Ball Valve
2000 lb. CWP

TC-580-CS-R-25-LL/66-LL
Sizes ¼" thru 2"
Threaded Ends
Page 50, 51

Two-Piece Bar Stock Carbon Steel Ball Valve
2000 lb. CWP ¼"-1"
1500 lb. CWP 1¼"-2"

T-580-CS-R-25/66
Sizes ¼" thru 2"
Threaded Ends
Page 52, 53

Three-Piece Carbon Steel Ball Valve
2000 lb. CWP

TM/KM/BM-590-CS-R-66-FS-LL
Sizes ½" thru 2"
Threaded, Socket or Butt Weld Ends
Page 54

Three-Piece Carbon Steel Ball Valve
1000 lb. CWP

T/K-595-CS-R-66-LL
Sizes ¼" thru 2"
Threaded or Socket Weld Ends
Page 55

Three-Piece Carbon Steel Ball Valve
1000 lb. CWP

TM/KM-595-CS-R-66
Sizes ¼" thru 2"
Threaded or Socket Weld Ends
Page 56

Carbon Steel Ball Valves

One-Piece Body • Reduced Port • Blowout-Proof Stem • CS Trim • Vented Ball

2000 PSI/138 Bar Non-Shock Cold Working Pressure◆

T-560-CS-R-25-LL
Threaded

CONFORMS TO MSS SP-110

MATERIAL LIST

	PART	SPECIFICATION
1.	Body	Carbon Steel ASTM A 216 Grade WCB
2.	Body Insert	Carbon Steel ASTM A 216 Grade WCB
3.	Ball (Vented)	Stainless Steel ASTM A 276 or ASTM A 351 Type CF8
4.	Stem	Carbon Steel ASTM A 108 Type 1045
5.	Seat	Reinforced PTFE
6.	Thrust Washer	Carbon Filled PTFE
7.	[1]Stem Packing	PTFE
8.	Threaded Pack Gland	Carbon Steel ASTM A 108 Type 1045
9.	Handle Nut	Carbon Steel ASTM A 283
10.	Handle	Carbon Steel ASTM A 283

[1]¼"-¾" one each, 1"-2" two each.

NOTE: Valves are static grounded by thrust washer and packing.

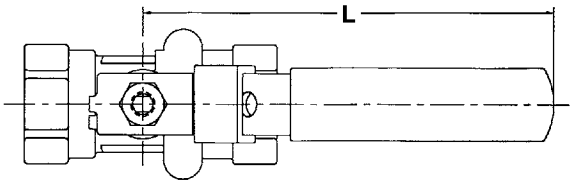

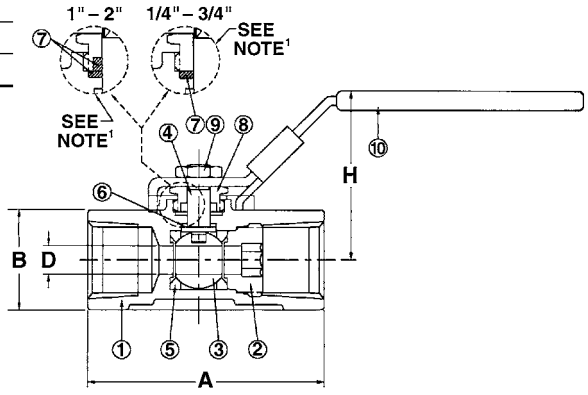

T-560-CS-R-25-LL
NPT x NPT

DIMENSIONS—WEIGHTS—QUANTITIES

Size		Dimensions A		B		D		L		H		T-560-CS-R-25-LL		Master
In.	mm.	In.	mm.	In.	mm.	In.	mm.	In.	mm.	In.	mm.	Lbs.	Kg.	Ctn. Qty.
¼	8	2.28	58	1.10	28	.31	8	4.29	109	1.97	50	.68	.31	50
⅜	10	2.28	58	1.10	28	.31	8	4.29	109	1.97	50	.68	.31	50
½	15	2.60	66	1.10	28	.31	8	4.29	109	1.97	50	.66	.30	50
¾	20	2.83	72	1.34	34	.47	12	4.29	109	2.20	56	.93	.42	50
1	25	3.23	82	1.61	41	.62	16	5.75	146	2.56	65	1.59	.72	40
1 ¼	32	3.54	90	1.97	50	.81	21	5.75	146	2.76	70	2.22	1.01	20
1 ½	40	3.86	98	2.24	57	1.00	25	7.40	188	3.29	84	3.22	1.46	20
2	50	4.33	110	2.76	70	1.25	32	7.40	188	3.49	89	4.65	2.11	10

◆For detailed Operating Pressure, refer to Pressure Temperature Chart on pages 66 and 67

NIBCO INC. WORLD HEADQUARTERS • 1516 MIDDLEBURY ST. • ELKHART, IN 46516-4740 • USA • PH: 1.800.234.0227
TECH SERVICES PH: 1.888.446.4226 • FAX: 1.888.336.4226 • INTERNATIONAL OFFICE PH: +1.574.295.3327 • FAX: +1.574.295.3455
www.nibco.com

Carbon Steel Ball Valves

One-Piece Body • Reduced Port • Blowout-Proof Stem •
CS Trim • Vented Ball • Fire Safe

2000 PSI/138 Bar Non-Shock Cold Working Pressure◆

CONFORMS TO API-607 FOURTH EDITION FIRE SAFE
• MSS SP-110

T-560-CS-R-25-FS-LL
Threaded

MATERIAL LIST

	PART	SPECIFICATION
1.	Body	Carbon Steel ASTM A 216 Grade WCB
2.	Body Insert	Carbon Steel ASTM A 216 Grade WCB
3.	Ball (Vented)	Stainless Steel ASTM A 276 or ASTM A 351 Type CF8
4.	Stem	Carbon Steel ASTM A 108 Type 1045
5.	Seat	Reinforced PTFE
6.	Thrust Washer	Carbon Filled PTFE
7.	[1]Stem Packing	Graphoil
8.	Threaded Pack Gland	Carbon Steel ASTM A 108 Type 1045
9.	Handle Nut	Carbon Steel ASTM A 283
10.	Handle	Carbon Steel ASTM A 283

[1] ¼"-¾" one each, 1"-2" two each.

NOTE: Valves are static grounded by thrust washer and packing.

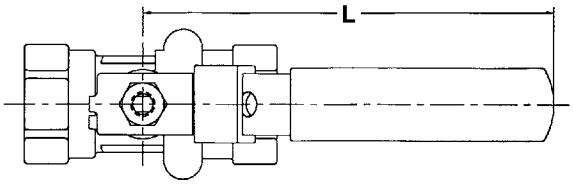

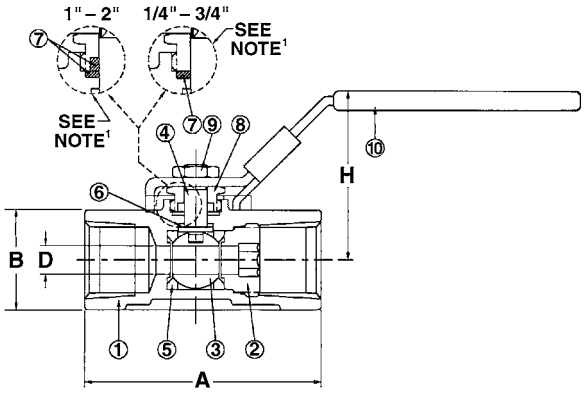

T-560-CS-R-25-FS-LL
NPT x NPT

DIMENSIONS—WEIGHTS—QUANTITIES

Size		Dimensions A		B		D		L		H		T-560-CS-R-25-FS-LL		Master
In.	mm.	In.	mm.	In.	mm.	In.	mm.	In.	mm.	In.	mm.	Lbs.	Kg.	Ctn. Qty.
¼	8	2.28	58	1.10	28	.31	8	4.29	109	1.97	50	.68	.31	50
⅜	10	2.28	58	1.10	28	.31	8	4.29	109	1.97	50	.68	.31	50
½	15	2.60	66	1.10	28	.31	8	4.29	109	1.97	50	.66	.30	50
¾	20	2.83	72	1.34	34	.47	12	4.29	109	2.20	56	.93	.42	50
1	25	3.23	82	1.61	41	.62	16	5.75	146	2.56	65	1.59	.72	40
1 ¼	32	3.54	90	1.97	50	.81	21	5.75	146	2.76	70	2.22	1.01	20
1 ½	40	3.86	98	2.24	57	1.00	25	7.40	188	3.29	84	3.22	1.46	20
2	50	4.33	110	2.76	70	1.25	32	7.40	188	3.49	89	4.65	2.11	10

◆For detailed Operating Pressure, refer to Pressure Temperature Chart on pages 66 and 67.

Carbon Steel Ball Valves

One-Piece Body • Reduced Port • Blowout-Proof Stem •
316 SS Trim • Vented Ball

2000 PSI/138 Bar Non-Shock Cold Working Pressure◆

CONFORMS TO MSS SP-110

T-560-CS-R-66-LL
Threaded

MATERIAL LIST

	PART	SPECIFICATION
1.	Body	Carbon Steel ASTM A 216 Grade WCB
2.	Body Insert	Carbon Steel ASTM A 216 Grade WCB
3.	Ball (Vented)	Stainless Steel ASTM A 276 Type 316 or ASTM A 351 Type CF8M
4.	Stem	Stainless Steel ASTM A 276 Type 316
5.	Seat	Reinforced PTFE
6.	Thrust Washer	Carbon Filled PTFE
7.	[1]Stem Packing	Graphoil
8.	Threaded Pack Gland	Carbon Steel ASTM A 108 Type 1045
9.	Handle Nut	Carbon Steel ASTM A 283
10.	Handle	Carbon Steel ASTM A 283

[1]¼"-¾" one each, 1"-2" two each.

NOTE: Valves are static grounded by thrust washer and packing.

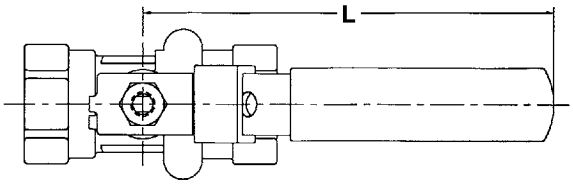

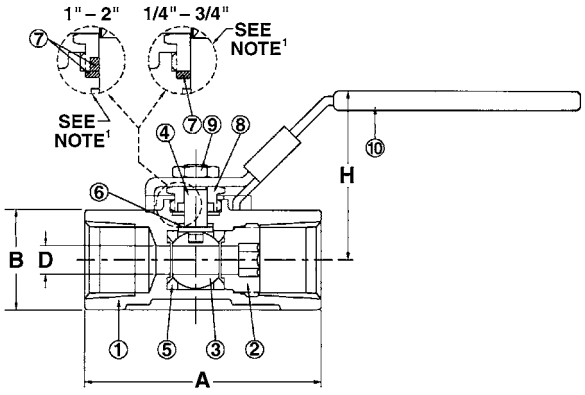

T-560-CS-R-66-LL
NPT x NPT

DIMENSIONS—WEIGHTS—QUANTITIES

Size		Dimensions A		B		D		L		H		T-560-CS-R-66-LL		Master
In.	mm.	In.	mm.	In.	mm.	In.	mm.	In.	mm.	In.	mm.	Lbs.	Kg.	Ctn. Qty.
¼	8	2.28	58	1.10	28	.31	8	4.29	109	1.97	50	.68	.31	50
⅜	10	2.28	58	1.10	28	.31	8	4.29	109	1.97	50	.68	.31	50
½	15	2.60	66	1.10	28	.31	8	4.29	109	1.97	50	.66	.30	50
¾	20	2.83	72	1.34	34	.47	12	4.29	109	2.20	56	.93	.42	50
1	25	3.23	82	1.61	41	.62	16	5.75	146	2.56	65	1.59	.72	40
1 ¼	32	3.54	90	1.97	50	.81	21	5.75	146	2.76	70	2.22	1.01	20
1 ½	40	3.86	98	2.24	57	1.00	25	7.40	188	3.29	84	3.22	1.46	20
2	50	4.33	110	2.76	70	1.25	32	7.40	188	3.49	89	4.65	2.11	10

◆For detailed Operating Pressure, refer to Pressure Temperature Chart on pages 66 and 67.

NIBCO INC. WORLD HEADQUARTERS • 1516 MIDDLEBURY ST. • ELKHART, IN 46516-4740 • USA • PH: 1.800.234.0227
TECH SERVICES PH: 1.888.446.4226 • FAX: 1.888.336.4226 • INTERNATIONAL OFFICE PH: +1.574.295.3327 • FAX: +1.574.295.3455
www.nibco.com

Carbon Steel Ball Valves

One-Piece Body • Reduced Port • Blowout-Proof Stem •
316 SS Trim • Vented Ball • Fire Safe

2000 PSI/138 Bar Non-Shock Cold Working Pressure◆

CONFORMS TO API-607 FOURTH EDITION FIRE SAFE
MSS SP-110

T-560-CS-R-66-FS-LL
Threaded

MATERIAL LIST

	PART	SPECIFICATION
1.	Body	Carbon Steel ASTM A 216 Grade WCB
2.	Body Insert	Carbon Steel ASTM A 216 Grade WCB
3.	Ball (Vented)	Stainless Steel ASTM A 276 Type 316 or ASTM A 351 Type CF8M
4.	Stem	Stainless Steel ASTM A 276 Type 316
5.	Seat	Reinforced PTFE
6.	Thrust Washer	Carbon Filled PTFE
7.	[1]Stem Packing	Graphoil
8.	Threaded Pack Gland	Carbon Steel ASTM A 108 Type 1045
9.	Handle Nut	Carbon Steel ASTM A 283
10.	Handle	Carbon Steel ASTM A 283

[1] ¼"-¾" one each, 1"-2" two each.

NOTE: Valves are static grounded by thrust washer and packing.

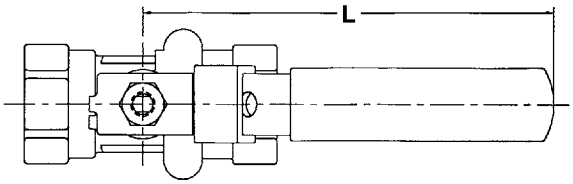

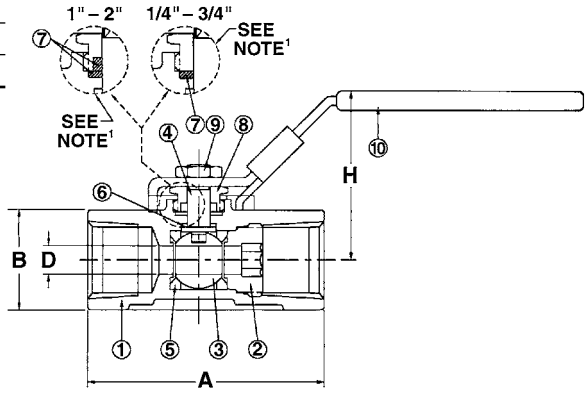

T-560-CS-R-66-FS-LL
NPT x NPT

DIMENSIONS—WEIGHTS—QUANTITIES

Size		Dimensions A		B		D		L		H		T-560-CS-R-66-FS-LL		Master
In.	mm.	In.	mm.	In.	mm.	In.	mm.	In.	mm.	In.	mm.	Lbs.	Kg.	Ctn. Qty.
¼	8	2.28	58	1.10	28	.31	8	4.29	109	1.97	50	.68	.31	50
⅜	10	2.28	58	1.10	28	.31	8	4.29	109	1.97	50	.68	.31	50
½	15	2.60	66	1.10	28	.31	8	4.29	109	1.97	50	.66	.30	50
¾	20	2.83	72	1.34	34	.47	12	4.29	109	2.20	56	.93	.42	50
1	25	3.23	82	1.61	41	.62	16	5.75	146	2.56	65	1.59	.72	40
1 ¼	32	3.54	90	1.97	50	.81	21	5.75	146	2.76	70	2.22	1.01	20
1 ½	40	3.86	98	2.24	57	1.00	25	7.40	188	3.29	84	3.22	1.46	20
2	50	4.33	110	2.76	70	1.25	32	7.40	188	3.49	89	4.65	2.11	10

◆For detailed Operating Pressure, refer to Pressure Temperature Chart on pages 66 and 67.

Carbon Steel Ball Valves

One-Piece Bar Stock Body • Blowout-Proof Stem •
CS Trim • Vented Ball

2000 PSI/138 Bar Non-Shock Cold Working Pressure (½"-1")
1500 PSI/103 Bar Non-Shock Cold Working Pressure (1¼"-2")◆

T-570-CS-R-25
Threaded

CONFORMS TO MSS SP-110

MATERIAL LIST

	PART	SPECIFICATION
1.	Handle Nut	Carbon Steel ASTM A 283 Zinc Plated
2.	Handle	Carbon Steel ASTM A 283 Zinc Plated
3.	Packing Nut	Carbon Steel ASTM A 283 Zinc Plated
4.	Belleville Washer (2)	Carbon Steel Black Oxide ASTM A 686
5.	Pack Gland	Stainless Steel ASTM A 240 Type 304
6.	Stem Packing	Reinforced PTFE
7.	Thrust Washer	Reinforced PTFE
8.	Stem	Carbon Steel ASTM A 108 Type 1045
9.	Ball (Vented) Chrome Plated	Carbon Steel ASTM 108 Type 1015/1045
10.	Seat Ring (2)	Reinforced PTFE
11.	Body Insert	Carbon Steel ASTM A 108 Type 1018 Phosphate Coated
12.	Body	Carbon Steel ASTM A 108 Type 1018 Phosphate Coated

NOTE: Valves are not available static grounded.

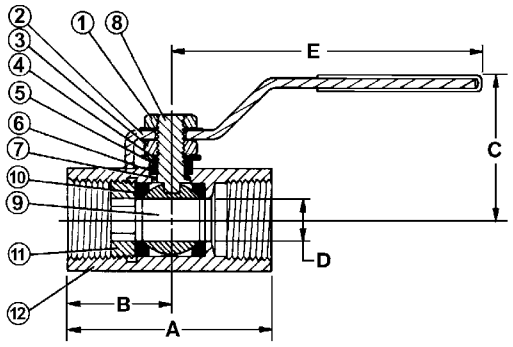

T-570-CS-R-25
NPT x NPT

DIMENSIONS—WEIGHTS—QUANTITIES

Size		Dimensions A		B		C		D		E		T-570-CS-R-25		Master
In.	mm.	In.	mm.	In.	mm.	In.	mm.	In.	mm.	In.	mm.	Lbs.	Kg.	Ctn. Qty.
½	15	2.19	56	1.10	28	1.63	41	.35	9	4.17	102	.55	.25	80
¾	20	2.63	67	1.32	34	1.75	44	.47	12	4.17	102	.77	.35	80
1	25	3.15	80	1.58	40	2.13	54	.62	16	5.83	145	1.60	.73	40
1 ¼	32	3.62	92	1.81	46	2.31	59	.81	21	5.83	145	2.35	1.07	8
1 ½	40	4.00	102	2.00	51	2.75	70	1.00	25	7.00	175	3.47	1.58	8
2	50	4.50	114	2.25	57	3.00	76	1.25	32	7.24	175	5.50	2.50	8

◆For detailed Operating Pressure, refer to Pressure Temperature Chart on pages 66 and 67.

NIBCO INC. WORLD HEADQUARTERS • 1516 MIDDLEBURY ST. • ELKHART, IN 46516-4740 • USA • PH: 1.800.234.0227
TECH SERVICES PH: 1.888.446.4226 • FAX: 1.888.336.4226 • INTERNATIONAL OFFICE PH: +1.574.295.3327 • FAX: +1.574.295.3455
www.nibco.com

Carbon Steel Ball Valves

One-Piece Bar Stock Body • Blowout-Proof Stem • 316 SS Trim • Vented Ball

2000 PSI/138 Bar Non-Shock Cold Working Pressure (½"-1")
1500 PSI/103 Bar Non-Shock Cold Working Pressure (1¼"-2")◆

CONFORMS TO MSS SP-110

T-570-CS-R-66
Threaded
Reinforced PTFE Seats and Seals
with SS Trim

MATERIAL LIST

	PART	SPECIFICATION
1.	Handle Nut	Carbon Steel ASTM A 283 Zinc Plated
2.	Handle	Carbon Steel ASTM A 283 Zinc Plated
3.	Packing Nut	Carbon Steel ASTM A 283 Zinc Plated
4.	Belleville Washer (2)	Carbon Steel Black Oxide ASTM A 686
5.	Pack Gland	Stainless Steel ASTM A 240 Type 304
6.	Stem Packing	Reinforced PTFE
7.	Thrust Washer	Reinforced PTFE
8.	Stem	Stainless Steel ASTM A 276 Type 316
9.	Ball (Vented)	Stainless Steel ASTM A 276 Type 316 or ASTM A 351 Type CF8M
10.	Seat Ring (2)	Reinforced PTFE
11.	Body Insert	Carbon Steel ASTM A 108 Type 1018 Phosphate Coated
12.	Body	Carbon Steel ASTM A 108 Type 1018 Phosphate Coated

NOTE: Valves are not available static grounded.

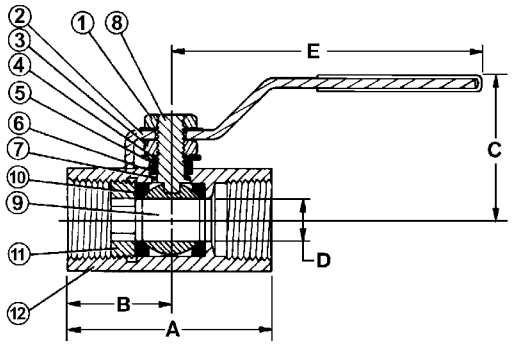

T-570-CS-R-66
NPT x NPT

DIMENSIONS—WEIGHTS—QUANTITIES

Size		Dimensions A		B		C		D		E		T-570-CS-R-66		Master
In.	mm.	In.	mm.	In.	mm.	In.	mm.	In.	mm.	In.	mm.	Lbs.	Kg.	Ctn. Qty.
½	15	2.19	56	1.10	28	1.63	41	.35	9	4.17	102	.55	.25	80
¾	20	2.63	67	1.32	34	1.75	44	.47	12	4.17	102	.77	.35	80
1	25	3.15	80	1.58	40	2.13	54	.62	16	5.83	145	1.60	.74	40
1 ¼	32	3.62	92	1.81	46	2.31	59	.81	21	5.83	145	2.35	1.07	8
1 ½	40	4.00	102	2.00	51	2.75	70	1.00	25	7.00	175	3.47	1.58	8
2	50	4.50	114	2.25	57	3.00	76	1.25	32	7.24	175	5.50	2.50	8

◆For detailed Operating Pressure, refer to Pressure Temperature Chart on pages 66 and 67.

Carbon Steel Ball Valves

Two-Piece Body • Conventional Port • Blowout-Proof Stem • CS Trim • Cast Mounting Pad • Vented Ball

2000 PSI/138 Bar Non-Shock Cold Working Pressure◆

CONFORMS TO MSS SP-110

MATERIAL LIST

	PART	SPECIFICATION
1.	Handle Nut	Carbon Steel ASTM A 283
2.	Stem	Carbon Steel ASTM A 108 Type 1045
3.	Lock Washer	Carbon Steel
4.	Threaded Pack Gland	Carbon Steel ASTM A 108 Type 1045
5.	Thrust Washer	Carbon Filled PTFE
6.	Gasket	PTFE
7.	Body End Piece	Carbon Steel ASTM A 216 Grade WCB (Investment Cast)
8.	Ball (Vented)	Stainless Steel ASTM A 276 Type 304 or ASTM A 351 Type CF8M
9.	Seat (2)	Reinforced PTFE
10.	Body	Carbon Steel ASTM A 216 Grade WCB
11.	Stem Packing (2)	Carbon Filled PTFE
12.	Locking Handle	Carbon Steel ASTM A 283

NOTE: Valves are static grounded by thrust washer and packing.

TC-580-CS-R-25-LL
Threaded

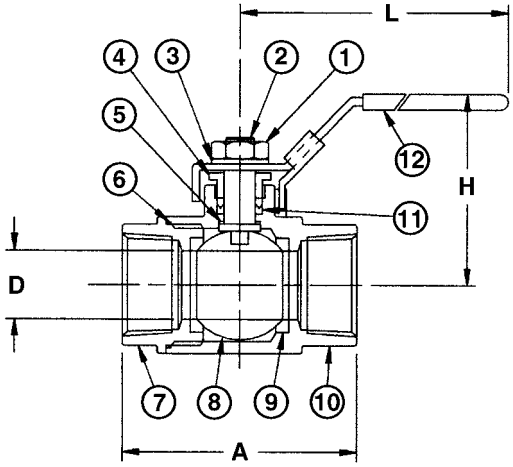

TC-580-CS-R-25-LL
NPT x NPT

DIMENSIONS—WEIGHTS—QUANTITIES

Size		Dimensions A		B		D		H		L		TC-580-CS-R-25-LL		Master
In.	mm.	In.	mm.	In.	mm.	In.	mm.	In.	mm.	In.	mm.	Lbs.	Kg.	Ctn. Qty.
¼	8	2.07	53	.83	21	.37	9	1.76	45	4.33	110	.51	.23	10
⅜	10	2.07	53	.83	21	.37	9	1.76	45	4.33	110	.48	.22	10
½	15	2.34	59	1.06	27	.50	13	1.92	47	4.33	110	.66	.30	10
¾	20	2.80	71	1.34	34	.69	18	2.40	61	5.83	148	1.30	.59	10
1	25	3.23	82	1.61	41	.87	22	2.56	65	5.83	148	1.79	.81	10
1¼	32	3.57	91	1.89	48	1.00	25	2.74	70	7.76	197	2.52	1.14	5
1½	40	4.04	103	2.26	57	1.25	32	2.98	76	7.76	197	3.75	1.70	5
2	50	4.63	118	2.76	70	1.50	38	3.17	81	7.76	197	5.80	2.63	5

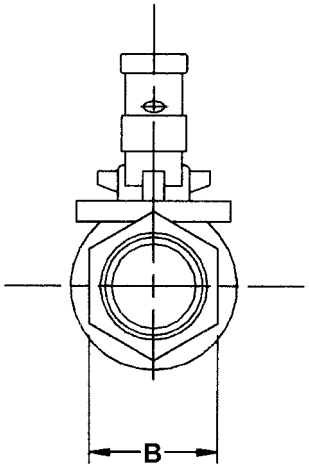

◆For detailed Operating Pressure, refer to Pressure Temperature Chart on pages 66 and 67.

NIBCO INC. WORLD HEADQUARTERS • 1516 MIDDLEBURY ST. • ELKHART, IN 46516-4740 • USA • PH: 1.800.234.0227
TECH SERVICES PH: 1.888.446.4226 • FAX: 1.888.336.4226 • INTERNATIONAL OFFICE PH: +1.574.295.3327 • FAX: +1.574.295.3455
www.nibco.com

Carbon Steel Ball Valves

Two-Piece Body • Conventional Port • Blowout-Proof Stem • 316 SS Trim • Cast Mounting Pad • Vented Ball

2000 PSI/138 Bar Non-Shock Cold Working Pressure◆

TC-580-CS-R-66-LL
Threaded

CONFORMS TO MSS SP-110

MATERIAL LIST

	PART	SPECIFICATION
1.	Handle Nut	Carbon Steel ASTM A 283
2.	Stem	Stainless Steel ASTM A 276 Type 316
3.	Lock Washer	Carbon Steel
4.	Threaded Pack Gland	Carbon Steel ASTM A 108 Type 1045
5.	Thrust Washer	Carbon Filled PTFE
6.	Gasket	PTFE
7.	Body End Piece	Carbon Steel ASTM A 216 Grade WCB (Investment Cast)
8.	Ball (Vented)	Stainless Steel ASTM A 276 Type 316 or ASTM A 351 Type CF8M
9.	Seat (2)	Reinforced PTFE
10.	Body	Carbon Steel ASTM A 216 Grade WCB
11.	Stem Packing (2)	Carbon Filled PTFE
12.	Locking Handle	Carbon Steel ASTM A 283

NOTE: Valves are static grounded by thrust washer and packing.

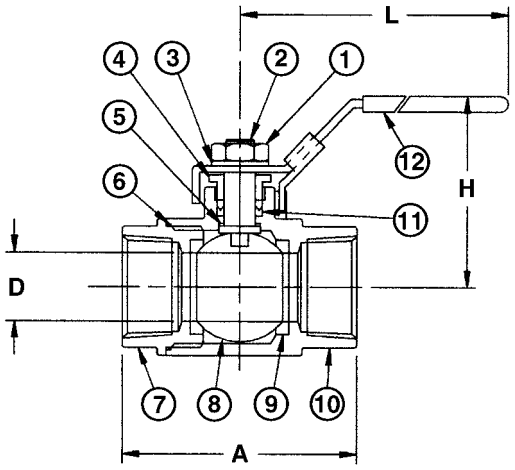

TC-580-CS-R-66-LL
NPT x NPT

DIMENSIONS—WEIGHTS—QUANTITIES

Size		Dimensions A		B		D		L		H		TC-580-CS-R-66-LL		Master
In.	mm.	In.	mm.	In.	mm.	In.	mm.	In.	mm.	In.	mm.	Lbs.	Kg.	Ctn. Qty.
¼	8	2.07	53	.90	23	.37	9	1.76	45	4.33	110	.51	.23	10
⅜	10	2.07	53	.90	23	.37	9	1.76	45	4.33	110	.48	.22	10
½	15	2.34	59	1.06	27	.50	13	1.92	49	4.33	110	.66	.30	10
¾	20	2.80	71	1.34	34	.69	18	2.40	61	5.83	148	1.30	.59	10
1	25	3.23	82	1.61	41	.87	22	2.56	65	5.83	148	1.79	.81	10
1¼	32	3.57	91	1.89	48	1.00	25	2.74	70	7.76	197	2.52	1.14	5
1½	40	4.04	103	2.26	57	1.25	32	2.98	76	7.76	197	3.75	1.70	5
2	50	4.63	118	2.76	70	1.50	38	3.17	81	7.76	197	5.80	2.63	5

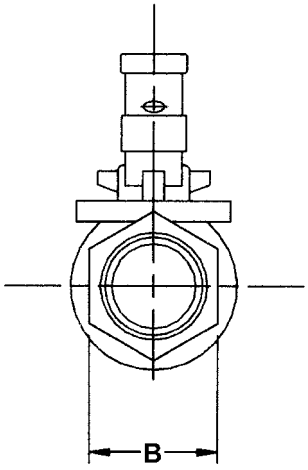

◆For detailed Operating Pressure, refer to Pressure Temperature Chart on pages 66 and 67.

Carbon Steel Ball Valves

Two-Piece Bar Stock Body • Conventional Port •
Blowout-Proof Stem • CS Trim • Vented Ball

2000 PSI/138 Bar Non-Shock Cold Working Pressure (¼"-1")
1500 PSI/103 Bar Non Shock Cold Working Pressure (1¼"-2")◆

T-580-CS-R-25
Threaded

CONFORMS TO MSS SP-110

MATERIAL LIST

	PART	SPECIFICATION
1.	Handle Nut	Carbon Steel ASTM A 283
2.	Stem	Carbon Steel ASTM A 108 Type 1045
3.	Spring Washer	Carbon Steel
4.	Belleville Washer (2)	Carbon Steel ASTM A 686
5.	Stem Packing (2)	Reinforced PTFE
6.	Thrust Washer	Carbon Filled PTFE
7.	Body End Piece	Carbon Steel ASTM A 108 Type 1018
8.	Spacer Seal	PTFE
9.	Ball (Vented)	Stainless Steel ASTM A 276 Type 304 or ASTM A 351 Type CF8M
10.	Seat (2)	Reinforced PTFE
11.	Body	Carbon Steel ASTM A 108 Type 1018
12.	Gland Washer	Stainless Steel ASTM A 240 Type 304
13.	Handle	Carbon Steel ASTM A 283

¼"-1" 2000 PSI CWP, 1¼"-2" 1500 PSI CWP.

NOTE: Valves are static grounded by thrust washer and packing.

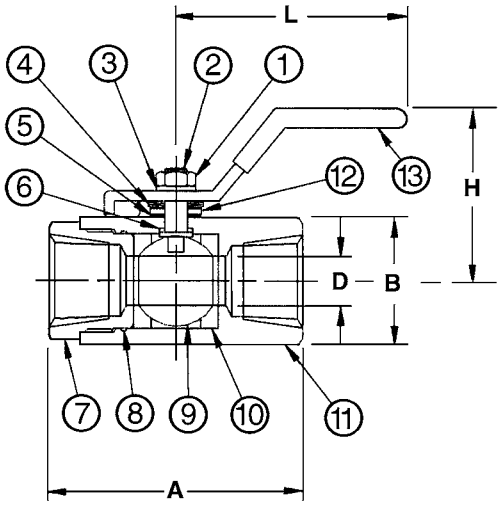

T-580-CS-R-25
NPT x NPT

DIMENSIONS—WEIGHTS—QUANTITIES

Size		Dimensions A		B		D		H		L		T-580-CS-R-25		Master
In.	mm.	In.	mm.	In.	mm.	In.	mm.	In.	mm.	In.	mm.	Lbs.	Kg.	Ctn. Qty.
¼	8	2.30	58	1.02	26	.38	9	2.22	56	4.13	105	.59	.27	10
⅜	10	2.30	58	1.02	26	.38	9	2.22	56	4.13	105	.55	.25	10
½	15	2.52	64	1.26	32	.50	9	2.44	62	4.17	105	.79	.36	10
¾	20	2.95	75	1.61	41	.69	13	2.64	67	4.17	105	1.43	.65	10
1	25	3.35	85	1.97	50	.87	18	2.83	72	5.83	148	2.40	1.08	10
1 ¼	32	3.66	93	2.17	55	1.00	25	2.97	75	5.83	148	3.01	1.37	5
1 ½	40	4.11	104	2.64	67	1.25	32	3.25	83	7.00	182	4.86	2.20	5
2	50	4.61	117	3.03	77	1.50	38	3.54	90	7.24	198	6.62	3.00	5

◆For detailed Operating Pressure, refer to Pressure Temperature Chart on pages 66 and 67.

NIBCO INC. WORLD HEADQUARTERS • 1516 MIDDLEBURY ST. • ELKHART, IN 46516-4740 • USA • PH: 1.800.234.0227
TECH SERVICES PH: 1.888.446.4226 • FAX: 1.888.336.4226 • INTERNATIONAL OFFICE PH: +1.574.295.3327 • FAX: +1.574.295.3455
www.nibco.com

Carbon Steel Ball Valves

Two-Piece Bar Stock Body • Conventional Port •
Blowout-Proof Stem • 316 SS Trim • Vented Ball

2000 PSI/138 Bar Non-Shock Cold Working Pressure (¼"-1")
1500 PSI/103 Bar Non Shock Cold Working Pressure (1¼"-2")◆

T-580-CS-R-66
Threaded

CONFORMS TO MSS SP-110

MATERIAL LIST

	PART	SPECIFICATION
1.	Handle Nut	Carbon Steel ASTM A 283
2.	Stem	Stainless Steel ASTM A 276 Type 316
3.	Lock Washer	Carbon Steel
4.	Belleville Washer (2)	Carbon Steel ASTM A 686
5.	Stem Packing (2)	Reinforced PTFE
6.	Thrust Washer	Carbon Filled PTFE
7.	Body End Piece	Carbon Steel ASTM A 108 Type 1018
8.	Spacer Seal	PTFE
9.	Ball (Vented)	Stainless Steel ASTM A 276 Type 316 or ASTM A 351 Type CF8M
10.	Seat (2)	Reinforced PTFE
11.	Body	Carbon Steel ASTM A 108 Type 1018
12.	Gland Washer	Stainless Steel ASTM A 240 Type 304
13.	Handle	Carbon Steel ASTM A 283

¼"-1" 2000 PSI CWP, 1¼"-2" 1500 PSI CWP.

NOTE: Valves are static grounded by thrust washer and packing.

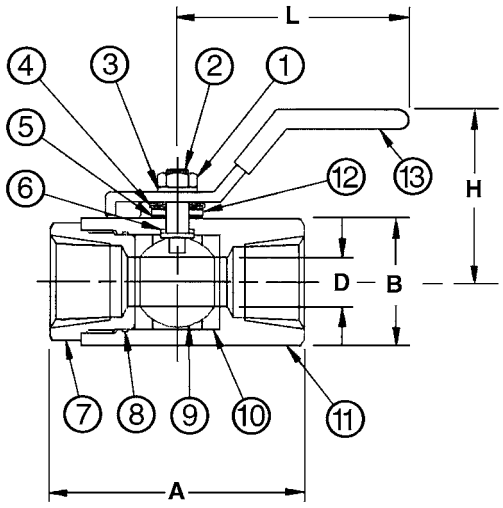

T-580-CS-R-66
NPT x NPT

DIMENSIONS—WEIGHTS—QUANTITIES

Size		Dimensions A		B		D		H		L		T-580-CS-R-66		Master
In.	mm.	In.	mm.	In.	mm.	In.	mm.	In.	mm.	In.	mm.	Lbs.	Kg.	Ctn. Qty.
¼	8	2.30	58	1.02	26	.38	10	2.22	56	4.13	105	.59	.27	10
⅜	10	2.30	58	1.02	26	.38	10	2.22	56	4.13	105	.55	.25	10
½	15	2.52	64	1.26	32	.50	10	2.44	62	4.17	105	.79	.36	10
¾	20	2.95	75	1.61	41	.69	13	2.64	66	4.17	105	1.43	.65	10
1	25	3.35	85	1.97	50	.89	18	2.83	72	5.83	148	2.40	1.08	10
1 ¼	32	3.66	93	2.17	55	1.00	25	2.97	75	5.83	148	3.01	1.37	5
1 ½	40	4.11	104	2.64	67	1.25	32	3.25	83	7.00	182	4.80	2.20	5
2	50	4.61	117	3.03	77	1.50	38	3.54	90	7.24	185	6.62	3.00	5

◆For detailed Operating Pressure, refer to Pressure Temperature Chart on pages 66 and 67.

Carbon Steel Ball Valves

Three-Piece Body • Threaded, Butt or Socket Weld Ends • Blowout-Proof Stem • Conventional Port • Enclosed Bolt Design • PTFE Seats • SS Trim • Cast ISO Mounting Pad • Vented Ball • Fire Safe

2000 PSI/138 Bar Non-Shock Cold Working Pressure◆

CONFORMS TO API-607 FOURTH EDITION FIRE SAFE • MSS SP-110 • MSS SP-72 (BUTT WELD) • API 608 ANTI-STATIC FEATURE

TM-590-CS-R-66-FS-LL
Threaded
Stainless Steel Trim
ISO Mount Pad

KM-590-CS-R-66-FS-LL
Socket Weld
Stainless Steel Trim
ISO Mount Pad

BM-590-CS-R-66-FS-LL
Butt Weld
Stainless Steel Trim
ISO Mount Pad

MATERIAL LIST

PART		SPECIFICATION
1.	Stem	Stainless Steel ASTM A 276 Type 316
2.	Handle Nut	Stainless Steel ASTM A 276 Type 304
3.	Lock Washer	Stainless Steel ASTM A 240 Type 304
4.	Locking Handle	Stainless Steel ASTM A 240 Type 304
5.	Stop Plate	Stainless Steel ASTM A 240 Type 304
6.	Pack Gland	Stainless Steel ASTM A 276 Type 316
7.	Stem Packing	Graphite
8.	Body End Seal	Graphite
9.	Bolt	Carbon Steel ASTM A 193 Grade B7
10.	Body End	Carbon Steel ASTM A 216 Grade WCB Phosphate Coated
11.	Body	Carbon Steel ASTM A 216 Grade WCB Phosphate Coated
12.	Ball (Vented)	Stainless Steel ASTM A 276 Type 316 or ASTM A 351 Type CF8M
13.	Seat	Reinforced PTFE 15% Glass
14.	Thrust Washer	Reinforced PTFE 15% Glass
15.	Static Grounding Devices	Stainless Steel ASTM A 276 Type 304
16.	Stop Pin	Stainless Steel ASTM A 276 Type 304

Note: Valves are static grounded by two ball detents that insure electro-continuity between the stem body and ball. The valve has electro-continuity across the discharge path with a resistance of not more than 10 ohms.

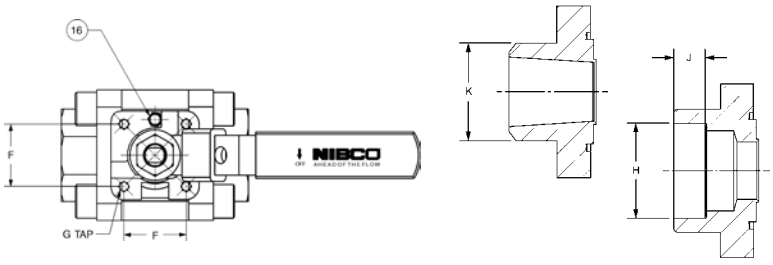

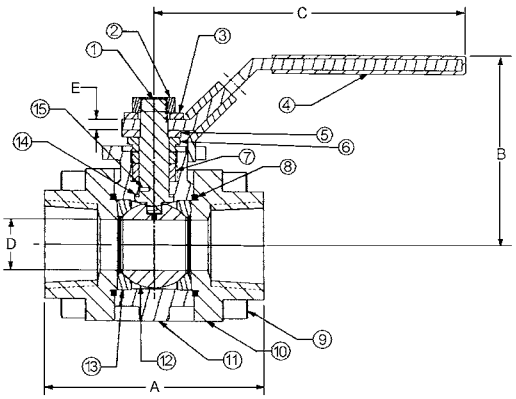

TM 590-CS-R-66-FS-LL
NPT x NPT

DIMENSIONS—WEIGHTS—QUANTITIES

Size		Dimensions A		B		C		D		E		F		G Thread	Flange	H Socket Weld		J Socket Weld		K Butt Weld		Threaded Weight		Socket Weld Weight		Butt Weld Weight	
In.	mm.	In.	mm.	In.	mm.	In.	mm.	In.	mm.	In.	mm.	In.	mm.	Tap	Type	In.	mm.	In	mm.	In.	mm.	Lbs.	Kg.	Lbs.	Kg.	Lbs.	Kg.
½	15	2.72	69	2.47	63	4.07	103	.43	11	.12	3	1.00	25	M5	F03	.86	22	.38	10	.84	21	1.80	.82	1.70	.78	1.60	.73
¾	20	2.94	75	2.70	69	4.07	103	.57	14	.12	3	1.00	25	M5	F03	1.08	27	.50	13	1.05	27	2.40	1.09	2.30	1.05	2.20	1.00
1	25	3.50	89	3.19	81	4.92	125	.81	21	.18	5	1.17	30	M5	F04	1.34	34	.50	13	1.32	34	3.80	1.73	3.60	1.64	3.50	1.59
1 ¼	32	3.90	99	3.64	92	5.91	150	.98	25	.20	5	1.17	30	M5	F04	1.69	43	.50	13	1.66	42	5.90	2.68	5.70	2.59	5.60	2.55
1 ½	40	4.42	112	3.88	99	7.68	195	1.25	32	.23	8	1.39	35	M6	F05	1.93	49	.50	13	1.90	48	7.60	3.45	7.40	3.36	7.30	1.61
2	50	5.04	128	4.09	104	7.68	195	1.50	38	.23	8	1.39	35	M6	F05	2.42	61	.62	16	2.38	60	10.50	4.77	10.30	4.68	10.20	4.64

◆For detailed Operating Pressure, refer to Pressure Temperature Chart on pages 66 and 67.

NIBCO INC. WORLD HEADQUARTERS • 1516 MIDDLEBURY ST. • ELKHART, IN 46516-4740 • USA • PH: 1.800.234.0227
TECH SERVICES PH: 1.888.446.4226 • FAX: 1.888.336.4226 • INTERNATIONAL OFFICE PH: +1.574.295.3327 • FAX: +1.574.295.3455
www.nibco.com

Carbon Steel Ball Valves

Three-Piece Body • Full Port • Blowout-Proof Stem • 316 SS Trim • Vented Ball

1000 PSI/69 Bar Non-Shock Cold Working Pressure◆

T-595-CS-R-66-LL
Threaded

K-595-CS-R-66-LL
Socket Weld

CONFORMS TO MSS SP-110

MATERIAL LIST

	PART	SPECIFICATION
1.	Handle Nut	Carbon Steel ASTM A 283
2.	Stem	Stainless Steel ASTM A 276 Type 316
3.	Lock Washer	Carbon Steel
4.	Stem Packing (1 Set)	Carbon Filled PTFE
5.	Thrust Washer	Carbon Filled PTFE
6.	Cap Bolt (4)	Carbon Steel ASTM A 193 Grade B7
7.	Union Seal (2)	Reinforced PTFE
8.	Ball (Vented)	Stainless Steel ASTM A 276 Type 316 or ASTM A 351 Type CF8M
9.	Body	Carbon Steel ASTM A 216 Grade WCB
10.	Seat (2)	Reinforced PTFE
11.	Body End (2)	Carbon Steel ASTM A 216 Grade WCB
12.	Lock Washer (4)	Carbon Steel
13.	Threaded Pack Gland	Carbon Steel ASTM A 108 Type 1045
14.	Handle	Carbon Steel ASTM A 283
15.	Cap Nut (4)	Carbon Steel ASTM A 283

NOTE: Valves are static grounded by thrust washer and packing.

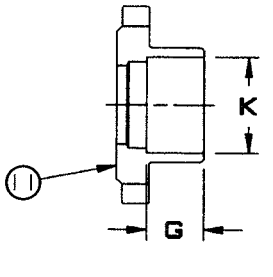

SOCKET WELD ENDS

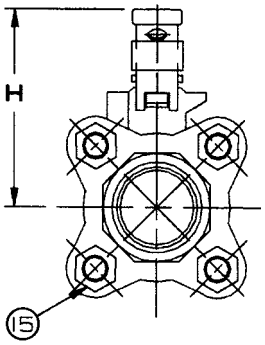

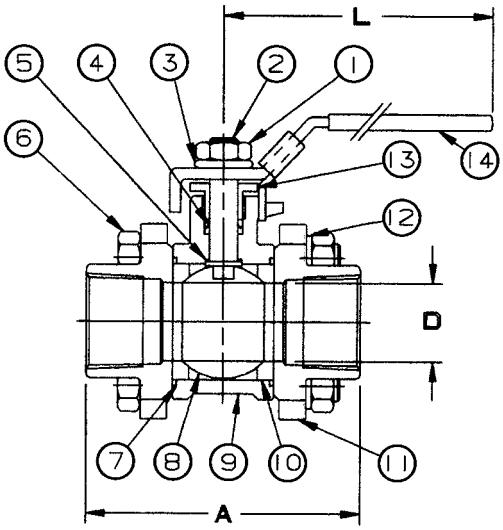

T or K 595-CS-R-66-LL
NPT x NPT or SOC x SOC

DIMENSIONS—WEIGHTS—QUANTITIES

Size		Dimensions A		D		G		K		H		L		T or K-595-CS-R-66-LL		Master
In.	mm.	In.	mm.	In.	mm.	In.	mm.	In.	mm.	In.	mm.	In.	mm.	Lbs.	Kg.	Ctn. Qty.
¼	8	2.36	60	.34	9	—	—	—	—	2.18	55	4.17	106	.97	.44	10
⅜	10	2.36	60	.34	9	—	—	—	—	2.18	55	4.17	106	.97	.44	10
½	15	2.76	70	.56	14	.38	10	.86	22	2.38	60	4.17	106	1.23	.56	10
¾	20	3.03	77	.81	21	.50	13	1.07	27	2.87	73	5.71	145	1.91	.87	10
1	25	3.62	92	1.00	25	.50	13	1.34	34	2.95	75	5.71	145	2.93	1.33	8
1 ¼	32	4.13	105	1.25	32	.50	13	1.69	43	3.66	93	7.36	187	4.27	1.94	5
1 ½	40	4.72	110	1.50	38	.50	13	1.93	49	3.94	100	7.36	187	6.01	2.73	5
2	50	5.43	138	1.97	50	.62	16	2.42	61	4.25	108	7.95	202	9.50	4.32	5

◆For detailed Operating Pressure, refer to Pressure Temperature Chart on pages 66 and 67.

Carbon Steel Ball Valves

Three-Piece Body • Full Port • Cast ISO Mounting Pad • Blowout-Proof Stem • 316 SS Trim • Vented Ball

1000 PSI/69 Bar Non-Shock Cold Working Pressure◆

TM-595-CS-R-66
Threaded
ISO Mount Pad

KM-595-CS-R-66
Socket Weld (½"-2")
ISO Mount Pad

CONFORMS TO MSS SP-110

MATERIAL LIST

	PART	SPECIFICATION
1.	Stop Pin	Stainless Steel ASTM A 276 Type 304
2.	Stop Plate	Carbon Steel ASTM A 283
3.	Stem	Stainless Steel ASTM A 276 Type 316
4.	Handle Nut	Carbon Steel A 283
5.	Stem Packing (1 Set)	Carbon Filled PTFE
6.	Thrust Washer	Carbon Filled PTFE
7.	Cap Bolt (4)	Carbon Steel ASTM A 193 Grade B7
8.	Body Ends (2)	Carbon Steel ASTM A 216 Grade WCB
9.	Seat (2)	Reinforced PTFE
10.	Body	Carbon Steel ASTM A 216 Grade WCB
11.	Ball (Vented)	Stainless Steel ASTM A 276 Type 316 or ASTM A 351 Type CF8M
12.	Union Seal (2)	Reinforced PTFE
13.	Cap Nut (4)	Carbon Steel A 283
14.	Threaded Pack Gland	Carbon Steel ASTM A 108 Type 1045
15.	Handle	Carbon Steel ASTM A 283

NOTE: Valves are static grounded by thrust washer and packing.

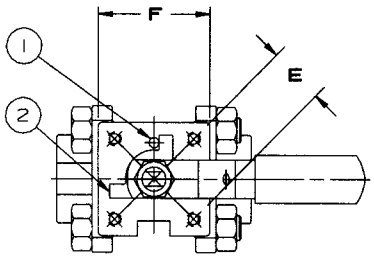

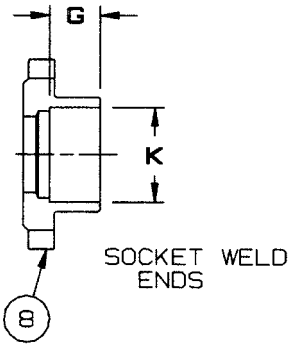

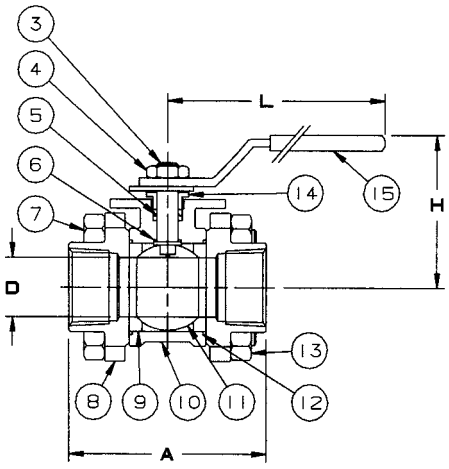

TM or KM-595-CS-R-66
NPT x NPT or SOC x SOC

DIMENSIONS—WEIGHTS—QUANTITIES

Size		Dimensions A		D		E		F		G		K		H		L		ISO	TM or KM-595-CS-R-66		Master
In.	mm.	In.	mm.	In.	mm.	In.	mm.	In.	mm.	In.	mm.	In.	mm.	In.	mm.	In.	mm.	5211	Lbs.	Kg.	Ctn. Qty.
¼	8	2.49	63	.34	9	.71	18	1.42	36	—	—	—	—	2.36	60	4.17	106	F03	1.00	.45	10
⅜	10	2.49	63	.34	9	.71	18	1.42	36	—	—	—	—	2.36	60	4.17	106	F03	1.00	.45	10
½	15	2.76	70	.56	14	.71	18	1.42	36	.38	10	.87	22	2.36	60	4.17	106	F03	1.20	.54	10
¾	20	3.03	77	.81	21	.83	21	1.65	42	.50	13	1.08	27	2.83	72	5.04	128	F04	1.90	.86	10
1	25	3.63	92	1.00	25	.88	22	1.65	42	.50	13	1.34	34	3.07	78	5.04	128	F04	2.90	1.31	8
1 ¼	32	4.14	105	1.25	32	.98	25	1.97	50	.50	13	1.69	43	3.35	85	7.83	199	F05	4.30	1.93	5
1 ½	40	4.73	120	1.50	38	.98	25	1.97	50	.50	13	1.93	49	3.66	93	7.83	199	F05	6.00	2.70	5
2	50	5.43	138	1.97	50	.98	25	1.97	50	.62	16	2.42	61	4.09	104	7.83	199	F05	9.50	4.28	2

◆For detailed Operating Pressure, refer to Pressure Temperature Chart on pages 66 and 67.

NIBCO INC. WORLD HEADQUARTERS • 1516 MIDDLEBURY ST. • ELKHART, IN 46516-4740 • USA • PH: 1.800.234.0227
TECH SERVICES PH: 1.888.446.4226 • FAX: 1.888.336.4226 • INTERNATIONAL OFFICE PH: +1.574.295.3327 • FAX: +1.574.295.3455
www.nibco.com

Stainless Steel Ball Valves

One, Two, and Three-Piece Body
Threaded, Butt or Socket Weld Ends

Stainless Steel Ball Valve Figure Number Key

T-580-S6-R-66-**

End Connection	Valve Style	Basic Material	Seat Material	Trim Material	Options
K - Socket Weld	560 - One-Piece Body (Casting)	CS - Carbon Steel	Y - Virgin PTFE	25 - Carbon Steel	FS - Fire Safe
T - Threaded	570 - One-Piece Body (Bar Stock)	S6 - Stainless Steel	R - Reinforced PTFE	66 - Stainless Steel	OL - Oval Locking Handle
TC - Threaded (Investment Cast Carbon Body)	580 - Two-Piece Body Conventional Port				LL - Locking Lever Handle
BM - Butt Weld ISO Mount	585 - Two-Piece Body Full Port				OV - Oval Handle
KM - Socket Weld ISO Mount	590 - Three-Piece Body Conventional Port				
TM - Threaded ISO Mount	595 - Three-Piece Body Full Port				

*** This key is a guide only and is not intended to infer that every valve combination will be produced.**

One, Two, and Three-Piece Stainless Steel Ball Valves Illustrated Index

One-Piece Stainless Steel Ball Valve
2000 lb. CWP

T-560-S6-R-66-LL/FS
Sizes ¼" thru 2"
Threaded Ends
Page 59, 60

Two-Piece Stainless Steel Ball Valve
2000 lb. CWP

T-580-S6-R-66-LL
Sizes ¼" thru 2"
Threaded Ends
Page 61

Two-Piece Stainless Steel Ball Valve
1000 lb. CWP

T-585-S6-R-66-LL
Sizes ¼" thru 2"
Threaded Ends
Page 62

Three-Piece Stainless Steel Ball Valve
2000 lb. CWP

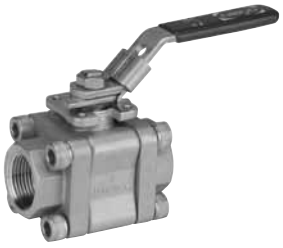

BM/KM/TM-590-S6-R-66-FS-LL
Sizes ½" thru 2"
Threaded, Butt or Socket Weld
Page 63

Three-Piece Stainless Steel Ball Valve
1000 lb. CWP

T/K-595-S6-R-66-LL
Sizes ¼" thru 2"
Threaded or Socket Weld
Page 64

Three-Piece Stainless Steel Ball Valve
1000 lb. CWP

TM/KM-595-S6-R-66
Sizes ¼" thru 2"
Threaded or Socket Weld
Page 65

Pressure Temperature Chart

Page 66, 67

NIBCO INC. WORLD HEADQUARTERS • 1516 MIDDLEBURY ST. • ELKHART, IN 46516-4740 • USA • PH: 1.800.234.0227
TECH SERVICES PH: 1.888.446.4226 • FAX: 1.888.336.4226 • INTERNATIONAL OFFICE PH: +1.574.295.3327 • FAX: +1.574.295.3455
www.nibco.com

Stainless Steel Ball Valves

One-Piece Body • Reduced Port • Blowout-Proof Stem •
316 SS Trim • Vented Ball

2000 PSI/138 Bar Non-Shock Cold Working Pressure◆

T-560-S6-R-66-LL
Threaded

CONFORMS TO MSS SP-110

MATERIAL LIST

	PART	SPECIFICATION
1.	Body	Stainless Steel ASTM A 351 Type CF8M
2.	Body Insert	Stainless Steel ASTM A 351 Type CF8M or ASTM A 351 Type CF8M
3.	Ball (Vented)	Stainless Steel ASTM A 276 Type 316 or ASTM A 351 Type CF8M
4.	Stem	Stainless Steel ASTM A 276 Type 316
5.	Seat	Reinforced PTFE
6.	Thrust Washer	Reinforced PTFE (Carbon 25% + PTFE 75%)
7.	[1]Stem Packing	PTFE
8.	Threaded Pack Gland	Stainless Steel ASTM A 276 Type 316
9.	Handle Nut	Stainless Steel ASTM A 276 Type 304
10.	Locking Handle	Stainless Steel ASTM A 240 Type 304

[1] ¼"-¾" one each, 1"-2" two each.

NOTE: Valves are static grounded by thrust washer and packing.
Valves tested in accordance with ASME B16.34

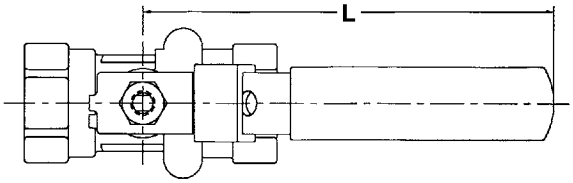

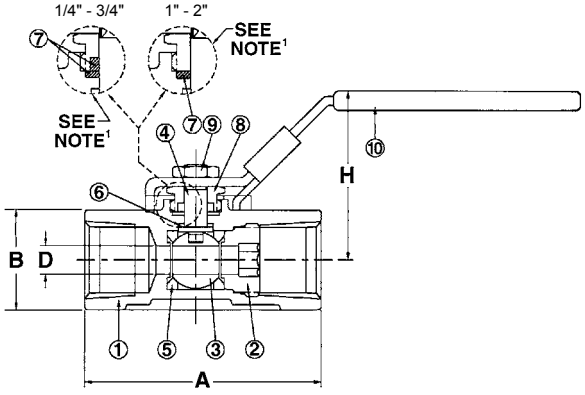

T-560-S6-R-66-LL
NPT x NPT

DIMENSIONS—WEIGHTS—QUANTITIES

Size		Dimensions A		B		D		L		H		T-560-S6-R-66-LL		Master
In.	mm.	In.	mm.	In.	mm.	In.	mm.	In.	mm.	In.	mm.	Lbs.	Kg.	Ctn. Qty.
¼	8	2.28	58	1.10	28	.31	8	4.29	109	1.97	50	.68	.31	50
⅜	10	2.28	58	1.10	28	.31	8	4.29	109	1.97	50	.68	.31	50
½	15	2.60	66	1.10	28	.31	8	4.29	109	1.97	50	.66	.30	50
¾	20	2.83	72	1.34	34	.47	12	4.29	109	2.20	56	.93	.42	50
1	25	3.23	82	1.61	41	.62	16	5.75	146	2.56	65	1.59	.72	40
1 ¼	32	3.54	90	1.97	50	.81	21	5.75	146	2.76	70	2.22	1.01	20
1 ½	40	3.86	98	2.24	57	1.00	25	7.40	188	3.29	84	3.22	1.46	20
2	50	4.33	110	2.76	70	1.25	32	7.40	188	3.49	89	4.65	2.11	10

◆For detailed Operating Pressure, refer to Pressure Temperature Chart on pages 66 and 67.

Stainless Steel Ball Valves

One-Piece Body • Reduced Port • Blowout-Proof Stem •
316 SS Trim • Vented Ball • Fire Safe

2000 PSI/138 Bar Non-Shock Cold Working Pressure◆

CONFORMS TO API-607 FIFTH EDITION FIRE SAFE MSS SP-110

T-560-S6-R-66-FS-LL
Threaded

MATERIAL LIST

	PART	SPECIFICATION
1.	Body	Stainless Steel ASTM A 351 Type CF8M
2.	Body Insert	Stainless Steel ASTM A 351 Type CF8M or ASTM A 276 Type 316
3.	Ball (Vented)	Stainless Steel ASTM A 276 Type 316 or ASTM A 351 Type CF8M
4.	Stem	Stainless Steel ASTM A 276 Type 316
5.	Seat	Reinforced PTFE
6.	Thrust Washer	Reinforced PTFE (Carbon 25% + PTFE 75%)
7.	[1]Stem Packing	Graphoil
8.	Threaded Pack Gland	Stainless Steel ASTM A 276 Type 316
9.	Handle Nut	Stainless Steel ASTM A 276 Type 304
10.	Locking Handle	Stainless Steel ASTM A 240 Type 304

[1] ¼"-¾" one each, 1"-2" two each.

NOTE: Valves are static grounded by thrust washer and packing.

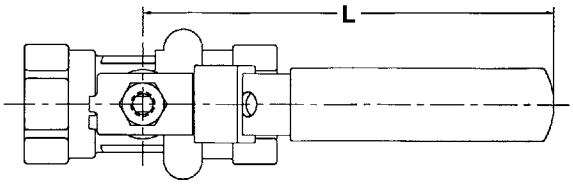

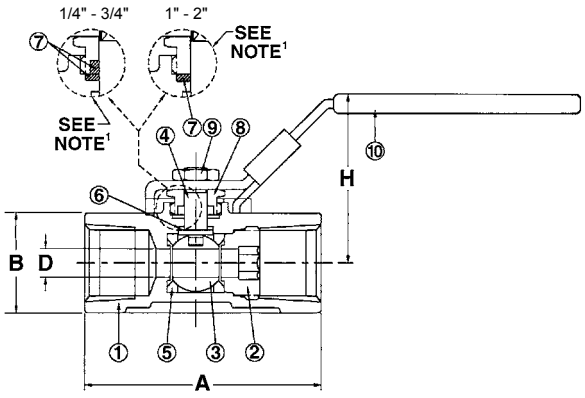

T-560-S6-R-66-FS-LL
NPT x NPT

DIMENSIONS—WEIGHTS—QUANTITIES

Size		Dimensions A		B		D		L		H		T-560-S6-R-66-FS-LL		Master
In.	mm.	In.	mm.	In.	mm.	In.	mm.	In.	mm.	In.	mm.	Lbs.	Kg.	Ctn. Qty.
¼	8	2.28	58	1.10	28	.31	8	4.29	109	1.97	50	.68	.31	50
⅜	10	2.28	58	1.10	28	.31	8	4.29	109	1.97	50	.68	.31	50
½	15	2.60	66	1.10	28	.31	8	4.29	109	1.97	50	.66	.30	50
¾	20	2.83	72	1.34	34	.47	12	4.29	109	2.20	56	.93	.42	50
1	25	3.23	82	1.61	41	.62	16	5.75	146	2.56	65	1.59	.72	40
1 ¼	32	3.54	90	1.97	50	.81	21	5.75	146	2.76	70	2.22	1.01	20
1 ½	40	3.86	98	2.24	57	1.00	25	7.40	188	3.29	84	3.22	1.46	20
2	50	4.33	110	2.76	70	1.25	32	7.40	188	3.49	89	4.65	2.11	10

◆For detailed Operating Pressure, refer to Pressure Temperature Chart on pages 66 and 67.

NIBCO INC. WORLD HEADQUARTERS • 1516 MIDDLEBURY ST. • ELKHART, IN 46516-4740 • USA • PH: 1.800.234.0227
TECH SERVICES PH: 1.888.446.4226 • FAX: 1.888.336.4226 • INTERNATIONAL OFFICE PH: +1.574.295.3327 • FAX: +1.574.295.3455
www.nibco.com

Stainless Steel Ball Valves

Two-Piece Body • Conventional Port • Blowout-Proof Stem • 316 SS Trim • Cast Mounting Pad • Vented Ball

2000 PSI/138 Bar Non-Shock Cold Working Pressure◆

CONFORMS TO MSS SP-110

MATERIAL LIST

	PART	SPECIFICATION
1.	Handle Nut	Stainless Steel ASTM A 276 Type 304
2.	Stem	Stainless Steel ASTM A 276 Type 316
3.	Lock Washer	Stainless Steel 304 SS
4.	Threaded Pack Gland	Stainless Steel ASTM A 276 Type 316
5.	Thrust Washer	Carbon Filled PTFE
6.	Gasket	PTFE
7.	Body End Piece	Stainless Steel ASTM A 351 Type CF8M
8.	Ball (Vented)	Stainless Steel ASTM A 276 Type 316 or ASTM A 351 Type CF8M
9.	Seat (2)	Reinforced PTFE
10.	Body	Stainless Steel ASTM A 351 Type CF8M
11.	Stem Packing (2)	Carbon Filled PTFE
12.	Locking Handle	Stainless Steel ASTM A 240 Type 304

NOTE: Valves are static grounded by thrust washer and packing.
Valves tested in accordance with ASME B16.34

T-580-S6-R-66-LL
Threaded

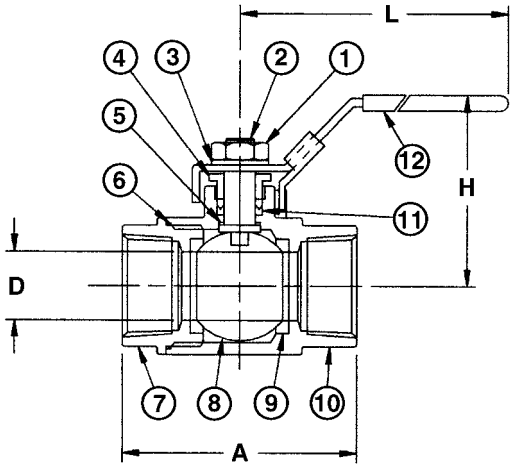

T-580-S6-R-66-LL
NPT x NPT

DIMENSIONS—WEIGHTS—QUANTITIES

Size		Dimensions A		B		D		L		H		T-580-S6-R-66-LL		Master
In.	mm.	In.	mm.	In.	mm.	In.	mm.	In.	mm.	In.	mm.	Lbs.	Kg.	Ctn. Qty.
¼	8	2.07	53	.83	21	.37	9	1.76	45	4.33	110	.51	.23	10
⅜	10	2.07	53	.83	21	.37	9	1.76	45	4.33	110	.48	.22	10
½	15	2.34	59	1.06	27	.50	13	1.92	49	4.33	110	.66	.30	10
¾	20	2.80	71	1.34	34	.69	18	2.40	61	5.83	148	1.30	.59	10
1	25	3.23	82	1.61	41	.87	22	2.56	65	5.83	148	1.79	.81	10
1 ¼	32	3.57	91	1.89	48	1.00	25	2.74	70	7.76	197	2.52	1.14	5
1 ½	40	4.04	103	2.26	57	1.25	32	2.98	76	7.76	197	3.75	1.70	5
2	50	4.63	118	2.76	70	1.50	38	3.17	81	7.76	197	5.80	2.63	5

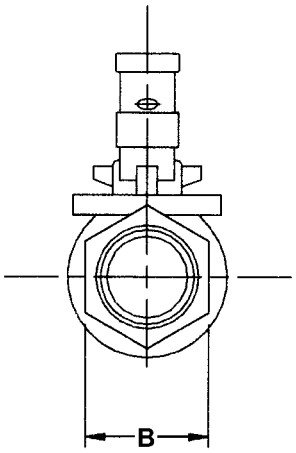

◆For detailed Operating Pressure, refer to Pressure Temperature Chart on pages 66 and 67.

Stainless Steel Ball Valves

Two-Piece Body • Full Port • Blowout-Proof Stem •
316 SS Trim • Cast Mounting Pad • Vented Ball

1000 PSI/69 Bar Non-Shock Cold Working Pressure◆

T-585-S6-R-66-LL
Threaded

CONFORMS TO MSS SP-110

MATERIAL LIST

	PART	SPECIFICATION
1.	Handle Nut	Stainless Steel ASTM A 276 Type 304
2.	Stem	Stainless Steel ASTM A 276 Type 316
3.	Spring Washer	Stainless Steel 304
4.	Threaded Pack Gland	Stainless Steel ASTM A 276 Type 316
5.	Thrust Washer	Carbon Filled PTFE
6.	Gasket	PTFE
7.	Body End Piece	Stainless Steel ASTM A 351 Type CF8M
8.	Ball (Vented)	Stainless Steel ASTM A 276 Type 316 or ASTM A 351 Type CF8M
9.	Seat (2)	Reinforced PTFE
10.	Body	Stainless Steel ASTM A 351 Type CF8M
11.	Stem Packing (2)	Carbon Filled PTFE
12.	Locking Handle	Stainless Steel ASTM A 240 Type 304

NOTE: Valves are static grounded by thrust washer and packing.
Valves tested in accordance with ASME B16.34

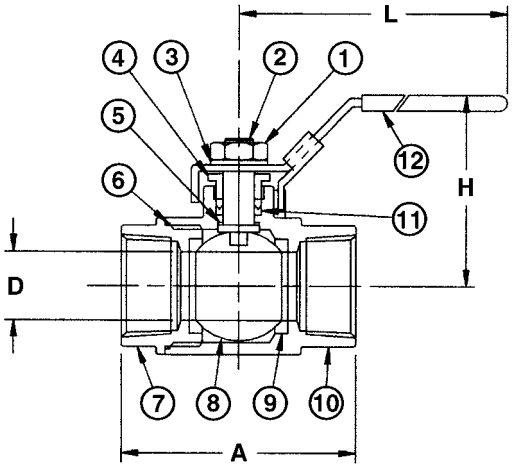

T-585-S6-R-66-LL
NPT x NPT

DIMENSIONS—WEIGHTS—QUANTITIES

Size		Dimensions A		B		D		H		L		T-585-S6-R-66-LL		Master
In.	mm.	In.	mm.	In.	mm.	In.	mm.	In.	mm.	In.	mm.	Lbs.	Kg.	Ctn. Qty.
¼	8	2.21	56	.83	21	.43	11	2.20	56	4.21	107	.59	.27	10
⅜	10	2.21	56	.83	21	.43	11	2.20	56	4.21	107	.56	.25	10
½	15	2.60	66	1.02	26	.56	14	2.30	58	4.21	107	.75	.34	10
¾	20	2.99	76	1.28	33	.81	21	2.79	71	5.73	146	1.47	.67	10
1	25	3.54	90	1.56	40	1.00	25	2.96	75	5.73	146	2.21	1.00	10
1¼	32	3.94	100	1.97	50	1.25	35	3.56	90	7.45	189	3.42	1.55	5
1½	40	4.41	112	2.20	66	1.50	38	3.84	98	7.45	189	5.20	2.36	5
2	50	5.00	127	2.76	69	2.00	50	4.24	108	8.08	205	7.99	3.63	5

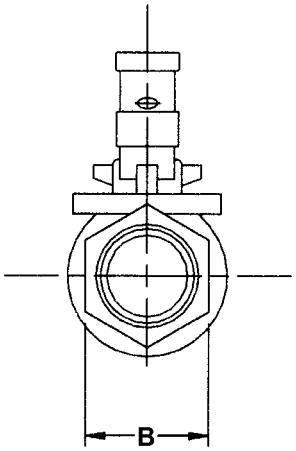

◆For detailed Operating Pressure, refer to Pressure Temperature Chart on pages 66 and 67.

NIBCO INC. WORLD HEADQUARTERS • 1516 MIDDLEBURY ST. • ELKHART, IN 46516-4740 • USA • PH: 1.800.234.0227
TECH SERVICES PH: 1.888.446.4226 • FAX: 1.888.336.4226 • INTERNATIONAL OFFICE PH: +1.574.295.3327 • FAX: +1.574.295.3455
www.nibco.com

Stainless Steel Ball Valves

Three-Piece Body • Threaded, Butt or Socket Weld Ends • Blowout-Proof Stem • Conventional Port • Enclosed Bolt Design • PTFE Seats • SS Trim • Cast ISO Mounting Pad • Vented Ball • Fire Safe

2000 PSI/138 Bar Non-Shock Cold Working Pressure◆

CONFORMS TO API-607 FOURTH EDITION FIRE SAFE • MSS SP-110 • MSS SP-72 (BUTT WELD) • API 608 ANTI-STATIC FEATURE

TM-590-S6-R-66-FS-LL
Threaded
ISO Mount Pad

KM-590-S6-R-66-FS-LL
Socket Weld
ISO Mount Pad

BM-590-S6-R-66-FS-LL
Butt Weld
ISO Mount Pad

MATERIAL LIST

	PART	SPECIFICATION
1.	Stem	Stainless Steel ASTM A 276 Type 316
2.	Handle Nut	Stainless Steel ASTM A 276 Type 304
3.	Lock Washer	Stainless Steel ASTM A 240 Type 304
4.	Locking Handle	Stainless Steel ASTM A 240 Type 304
5.	Stop Plate	Stainless Steel ASTM A 240 Type 304
6.	Pack Gland	Stainless Steel ASTM A 276 Type 316
7.	Stem Packing	Graphite
8.	Body End Seal	Graphite
9.	Bolt	Stainless Steel ASTM A 193 B8 Type 304
10.[1]	Body End	Stainless Steel ASTM A 351 Type CF8M
11.	Body	Stainless Steel ASTM A 351 Type CF8M
12.	Ball (Vented)	Stainless Steel ASTM A 351 Type CF8M or ASTM A 276 Type 316
13.	Seat	Reinforced PTFE 15% Glass
14.	Thrust Washer	Reinforced PTFE 15% Glass
15.	Static Grounding Device	Stainless Steel ASTM A 276 Type 304
16.	Stop Pin	Stainless Steel ASTM A 276 Type 304

[1] **Threaded Connections: CF8M, Weld Connections: CF3M.**

Note: Valves are static grounded by two ball detents that insure electro-continuity between the stem body and ball. The valve has electro-continuity across the discharge path with a resistance of not more than 10 ohms.

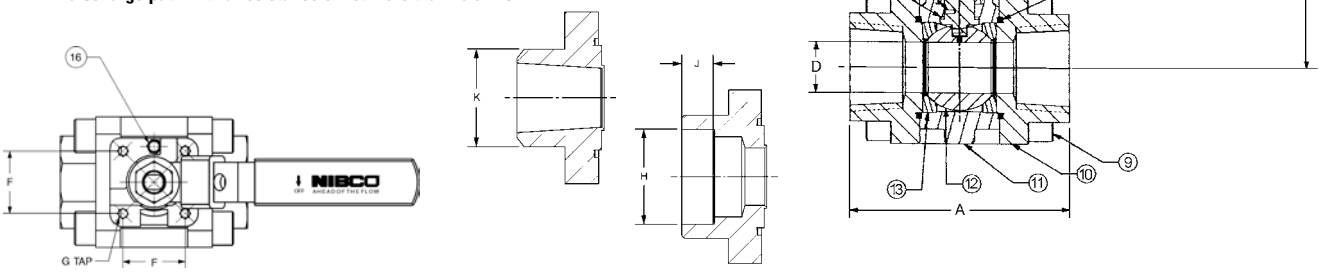

DIMENSIONS—WEIGHTS—QUANTITIES

Size		Dimensions A		B		C		D		E		F		G Thread	Flange	H Socket Weld		J Socket Weld		K Butt Weld		Threaded Weight		Socket Weld Weight		Butt Weld Weight	
In.	mm.	In.	mm.	In.	mm.	In.	mm.	In.	mm.	In.	mm.	In.	mm.	Tap	Type	In.	mm.	In	mm.	In.	mm.	Lbs.	Kg.	Lbs.	Kg.	Lbs.	Kg.
½	15	2.72	69	2.47	63	4.07	103	.43	11	.12	3	1.00	25	M5	F03	.86	22	.38	10	.84	21	1.80	.82	1.70	.78	1.60	.73
¾	20	2.94	75	2.70	69	4.07	103	.57	14	.12	3	1.00	25	M5	F03	1.08	27	.50	13	1.05	27	2.40	1.09	2.30	1.05	2.20	1.00
1	25	3.50	89	3.19	81	4.92	125	.81	21	.18	5	1.17	30	M5	F04	1.34	34	.50	13	1.32	34	3.80	1.73	3.60	1.64	3.50	1.59
1 ¼	32	3.90	99	3.64	92	5.91	150	.98	25	.20	5	1.17	30	M5	F04	1.69	43	.50	13	1.66	42	5.90	2.68	5.70	2.59	5.60	2.55
1 ½	40	4.42	112	3.88	99	7.68	195	1.25	32	.23	8	1.39	35	M6	F05	1.93	49	.50	13	1.90	48	7.60	3.45	7.40	3.36	7.30	1.61
2	50	5.04	128	4.09	104	7.68	195	1.50	38	.23	8	1.39	35	M6	F05	2.42	61	.62	16	2.38	60	10.50	4.77	10.30	4.68	10.20	4.64

◆ **For detailed Operating Pressure, refer to Pressure Temperature Chart on pages 66 and 67.**

Stainless Steel Ball Valves

Three-Piece Body • Full Port • Blowout-Proof Stem • Full Port • 316 SS Trim • Vented Ball

1000 PSI/69 Bar Non-Shock Cold Working Pressure◆

T-595-S6-R-66-LL
Threaded

K-595-S6-R-66-LL
Socket Weld

CONFORMS TO MSS SP-110

MATERIAL LIST

	PART	SPECIFICATION
1.	Handle Nut	Stainless Steel ASTM A 276 Type 304
2.	Stem	Stainless Steel ASTM A 276 Type 316
3.	Lock Washer	Stainless Steel 304
4.	Stem Packing (1 Set)	Carbon Filled PTFE
5.	Thrust Washer	Carbon Filled PTFE
6.	Cap Bolt (4)	Stainless Steel ASTM A 193 B8 Type 304
7.	Union Seal (2)	Reinforced PTFE
8.	Ball (Vented)	Stainless Steel ASTM A 276 Type 316 or ASTM A 351 Type CF8M
9.	Body	Stainless Steel ASTM A 351 Type CF8M
10.	Seat (2)	Reinforced PTFE
11.	[1]Body End (2)	Stainless Steel ASTM A 351 Type CF8M
12.	Lock Washer (4)	Stainless Steel 304
13.	Threaded Pack Gland	Stainless Steel ASTM A 276 Type 316
14.	Locking Handle	Stainless Steel ASTM A 240 Type 304
15.	Cap Nut (4)	Stainless Steel 304

NOTE: Valves are static grounded by thrust washer and packing.

[1] Threaded Ends: CF8M, Socket Weld Ends: CF3M.

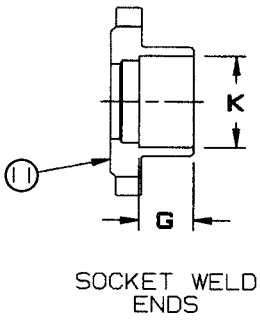

SOCKET WELD ENDS

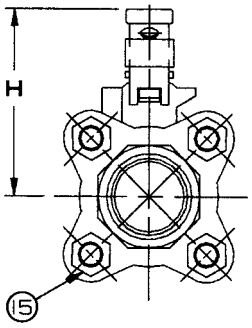

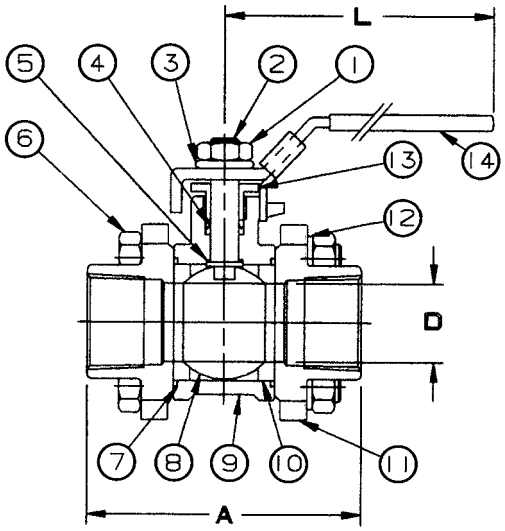

T/K-595-S6-R-66-LL
NPT x NPT or SOC x SOC

DIMENSIONS—WEIGHTS—QUANTITIES

Size		Dimensions A		D		G		K		H		L		T or K-595-S6-R-25-LL		Master
In.	mm.	In.	mm.	In.	mm.	In.	mm.	In.	mm.	In.	mm.	In.	mm.	Lbs.	Kg.	Ctn. Qty.
¼	8	2.36	60	.34	9	—	—	—	—	2.18	55	4.17	106	.97	.44	10
⅜	10	2.36	60	.34	9	—	—	—	—	2.18	55	4.17	106	.97	.44	10
½	15	2.76	70	.56	14	.38	10	.86	22	2.38	60	4.17	106	1.23	.56	10
¾	20	3.03	77	.81	21	.50	13	1.07	27	2.87	73	5.71	145	1.91	.87	10
1	25	3.62	92	1.00	25	.50	13	1.34	34	2.95	75	5.71	145	2.93	1.33	8
1 ¼	32	4.13	105	1.25	32	.50	13	1.69	43	3.66	93	7.36	187	4.27	1.94	5
1 ½	40	4.72	110	1.50	38	.50	13	1.93	49	3.94	100	7.36	187	6.01	2.73	5
2	50	5.43	138	1.97	50	.62	16	2.42	61	4.25	108	7.95	202	9.50	4.32	5

◆For detailed Operating Pressure, refer to Pressure Temperature Chart on pages 66 and 67.

NIBCO INC. WORLD HEADQUARTERS • 1516 MIDDLEBURY ST. • ELKHART, IN 46516-4740 • USA • PH: 1.800.234.0227
TECH SERVICES PH: 1.888.446.4226 • FAX: 1.888.336.4226 • INTERNATIONAL OFFICE PH: +1.574.295.3327 • FAX: +1.574.295.3455
www.nibco.com

Stainless Steel Ball Valves

Three-Piece Body • Full Port • Cast ISO Mounting Pad • Blowout-Proof Stem • 316 SS Trim • Vented Ball

1000 PSI/69 Bar Non-Shock Cold Working Pressure◆

TM-595-S6-R-66
Threaded
ISO Mount

KM-595-S6-R-66
Socket Weld (½"-2")
ISO Mount

CONFORMS TO MSS SP-110

MATERIAL LIST

	PART	SPECIFICATION
1.	Stop Pin	Stainless Steel ASTM A 276 Type 304
2.	Stop Plate	Stainless Steel ASTM A 240 Type 304
3.	Stem	Stainless Steel ASTM A 276 Type 316
4.	Handle Nut	Stainless Steel 304
5.	Stem Packing (1 Set)	Carbon Filled PTFE
6.	Thrust Washer	Carbon Filled PTFE
7.	Cap Bolt	Stainless Steel ASTM A 193 B8 Type 304
8.	[1]Body End (2)	Stainless Steel ASTM A 351 Type CF8M
9.	Seat (2)	Reinforced PTFE
10.	Body	Stainless Steel ASTM A 351 Type CF8M
11.	Ball (Vented)	Stainless Steel ASTM A 351 Type CF8M or ASTM A 276 Type 316
12.	Union Seal (2)	Reinforced PTFE
13.	Cap Nut (4)	Stainless Steel 304
14.	Threaded Pack Gland	Stainless Steel ASTM A 276 Type 316
15.	Handle	Stainless Steel ASTM A 240 Type 304

NOTE: Valves are static grounded by thrust washer and packing.

[1] Threaded Ends: CF8M, Socket Weld Ends: CF3M.

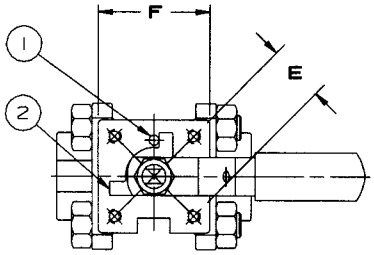

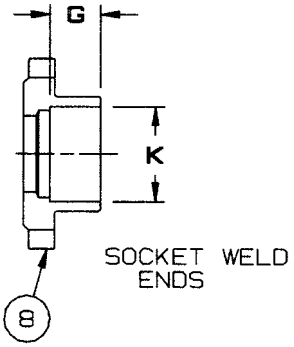

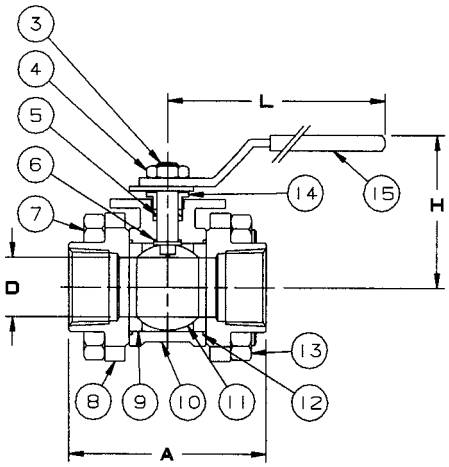

TM/KM-595-S6-R-66
NPT x NPT or SOC x SOC

DIMENSIONS—WEIGHTS—QUANTITIES

Size		Dimensions A		D		E		F		G		K		H		L		ISO	TM or KM-595-S6-R-66		Master
In.	mm.	In.	mm.	In.	mm.	In.	mm.	In.	mm.	In.	mm.	In.	mm.	In.	mm.	In.	mm.	5211	Lbs.	Kg.	Ctn. Qty.
¼	8	2.49	63	.34	9	.71	18	1.42	36	—	—	—	—	2.36	60	4.17	106	F03	1.00	.45	10
⅜	10	2.49	63	.34	9	.71	18	1.42	36	—	—	—	—	2.36	60	4.17	106	F03	1.00	.45	10
½	15	2.76	70	.56	14	.71	18	1.42	36	.38	10	.87	22	2.36	60	4.17	106	F03	1.20	.54	10
¾	20	3.03	77	.81	21	.83	21	1.65	42	.50	13	1.08	27	2.83	72	5.04	128	F04	1.90	.86	10
1	25	3.63	92	1.00	25	.88	22	1.65	42	.50	13	1.34	34	3.07	78	5.04	128	F04	2.90	1.31	8
1¼	32	4.14	105	1.25	32	.98	25	1.97	50	.50	13	1.69	43	3.35	85	7.83	199	F05	4.30	1.93	5
1½	40	4.73	120	1.50	38	.98	25	1.97	50	.50	13	1.93	49	3.66	93	7.83	199	F05	6.00	2.70	5
2	50	5.43	138	1.97	50	.98	25	1.97	50	.62	16	2.42	61	4.09	104	7.83	199	F05	9.50	4.28	2

◆For detailed Operating Pressure, refer to Pressure Temperature Chart on pages 66 and 67.

Pressure Temperature Ratings

Carbon and Stainless Steel Ball Valves • Threaded and Socket Weld Ends • One-Piece Carbon/Stainless

(Cast)

T-560-CS
with Glass-Reinforced PTFE Seats

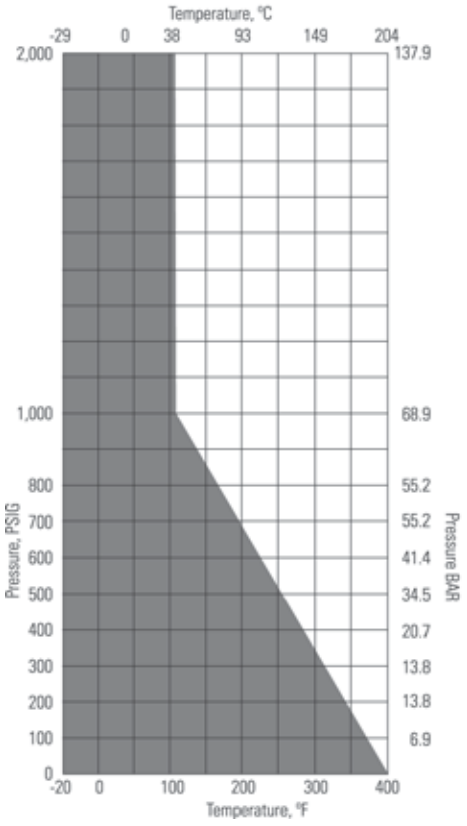

(Bar Stock)

T-570
with Glass-Reinforced PTFE Seats

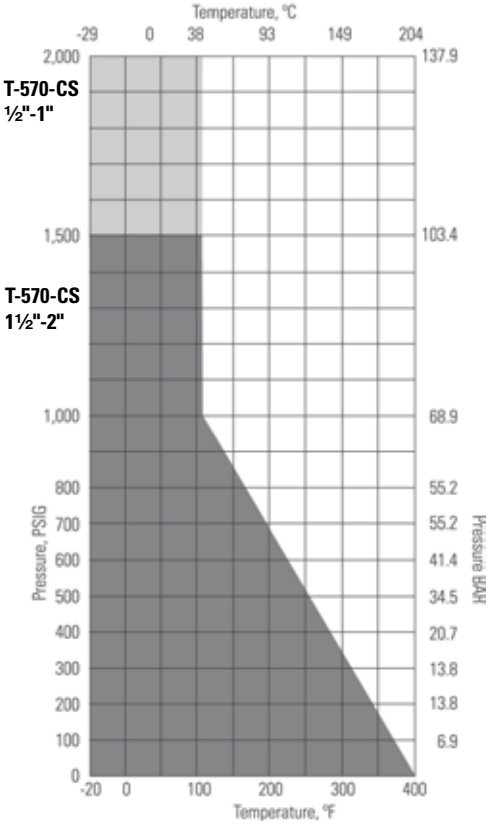

Shaded area refers to recommended seat rating.

NIBCO INC. WORLD HEADQUARTERS • 1516 MIDDLEBURY ST. • ELKHART, IN 46516-4740 • USA • PH: 1.800.234.0227
TECH SERVICES PH: 1.888.446.4226 • FAX: 1.888.336.4226 • INTERNATIONAL OFFICE PH: +1.574.295.3327 • FAX: +1.574.295.3455
www.nibco.com

Pressure/Temperature Ratings

Carbon and Stainless Steel Ball Valves • Threaded, Socket, and Butt Weld Ends
Two and Three-Piece Carbon/Stainless

TM/KM/BM-590-CS/S6
T-580-CS and S6
with Glass-Reinforced PTFE Seats

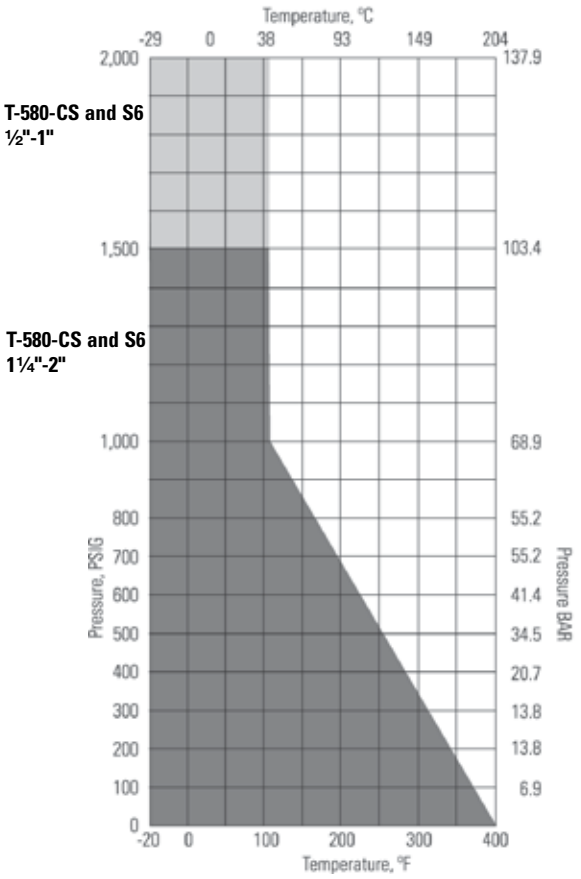

T-585-S6
T/K/TM/KM-595-CS and S6 Ball Valves
with Glass-Filled PTFE Seats

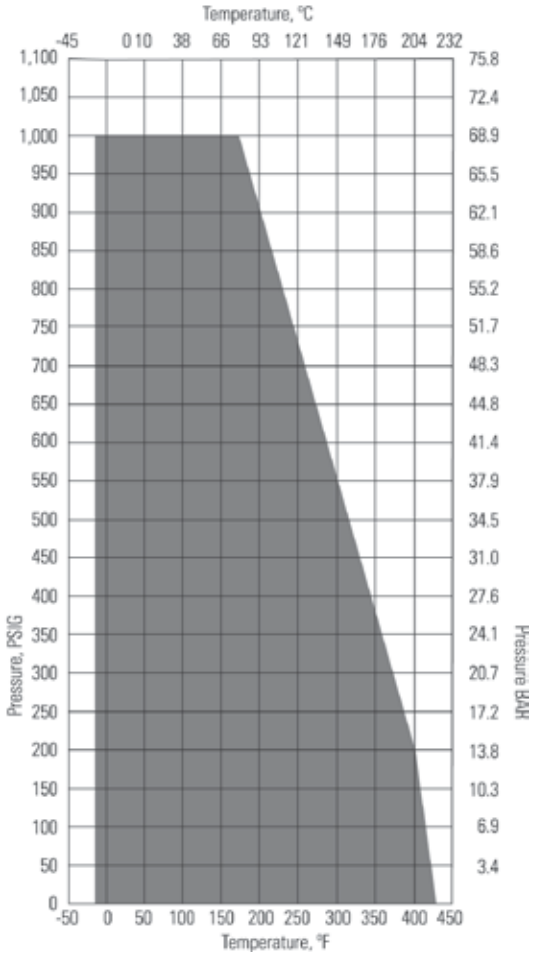

Shaded area refers to recommended seat rating.

Carbon and Stainless Steel Flanged Ball Valves

Unibody and Split-Body Full Bore

Carbon and Stainless Steel Flanged Ball Valve Figure Number Key

F-510-CS-R-66--**-****

End Connection	Valve Type	Pressure Rating	Bore Size	Body Material	Seat	Trim Material	Service Prep	Operator
F - Flanged	5 - Floating Ball	1 - Class 150 3 - Class 300	0 - Reduced 5 - Full	CS - A 216 WCB Carbon Steel S6 - A 351 CF8M Stainless Steel	R - Reinforced PTFE F - Filled PTFE	66 - Stainless Steel	FS - AP 1607 Fire Safe	LL - Locking Lever OV - Oval LO - Locking Oval GO - Gear Operator

*** This key is a guide only and is not intended to infer that every valve combination will be produced.**
Packing and seal materials are controlled by service preparation.
Oxygen Service Valves are available, consult factory.

NIBCO INC. WORLD HEADQUARTERS • 1516 MIDDLEBURY ST. • ELKHART, IN 46516-4740 • USA • PH: 1.800.234.0227
TECH SERVICES PH: 1.888.446.4226 • FAX: 1.888.336.4226 • INTERNATIONAL OFFICE PH: +1.574.295.3327 • FAX: +1.574.295.3455
www.nibco.com

One and Two-Piece Carbon Steel Flanged Ball Valves Illustrated Index

Unibody Design Detail **Split-Body Design Detail** **Page 70, 71**	Unibody Carbon Steel Flanged Ball Valve ANSI Class 150 **F-510-CS-R-66-FS** Sizes ½" thru 12" Flanged **Page 72**	Unibody Carbon Steel Flanged Ball Valve ANSI Class 300 **F-530-CS-R-66-FS** Sizes ½" thru 10" Flanged **Page 73**
Split-Body Carbon Steel Flanged Ball Valve ANSI Class 150 **F-515-CS-F-66-FS** Sizes ½" thru 12" Flanged **Page 74**	Split-Body Carbon Steel Flanged Ball Valve ANSI Class 300 **F-535-CS-F-66-FS** Sizes ½" thru 12" Flanged **Page 75**	

Flanged Ball Valves

The Positive Solution For All Your Flow Control Applications.

NIBCO® flanged ball valves provide precision, performance and value for industrial flow control applications. The unibody and split-body valves are designed and manufactured to meet or exceed ANSI, MSS and API specifications. And both styles offer these outstanding features:

- A pressure-safe stem shoulder design that protects against failure under excess pressure.
- Tight, leakproof engineered seals and bi-directional operation.
- Low-friction engineered seat design for consistent and predictable low-torque operation.
- Pre-drilled and tapped mounting pads that allow universal mounting of actuators.
- Lock-out capability in either open or closed position for added safety.
- Available in a wide range of materials and sizes.

Unibody Flanged Ball Valves

- A unibody design eliminates unnecessary joint faces where leakage may occur, and features a double-sealed end plug.
- Increased packing depth allows adequate V-ring packing to prevent leakage around the stem.
- Large-diameter stem provides extra protection from stresses that cause failure in smaller stems.

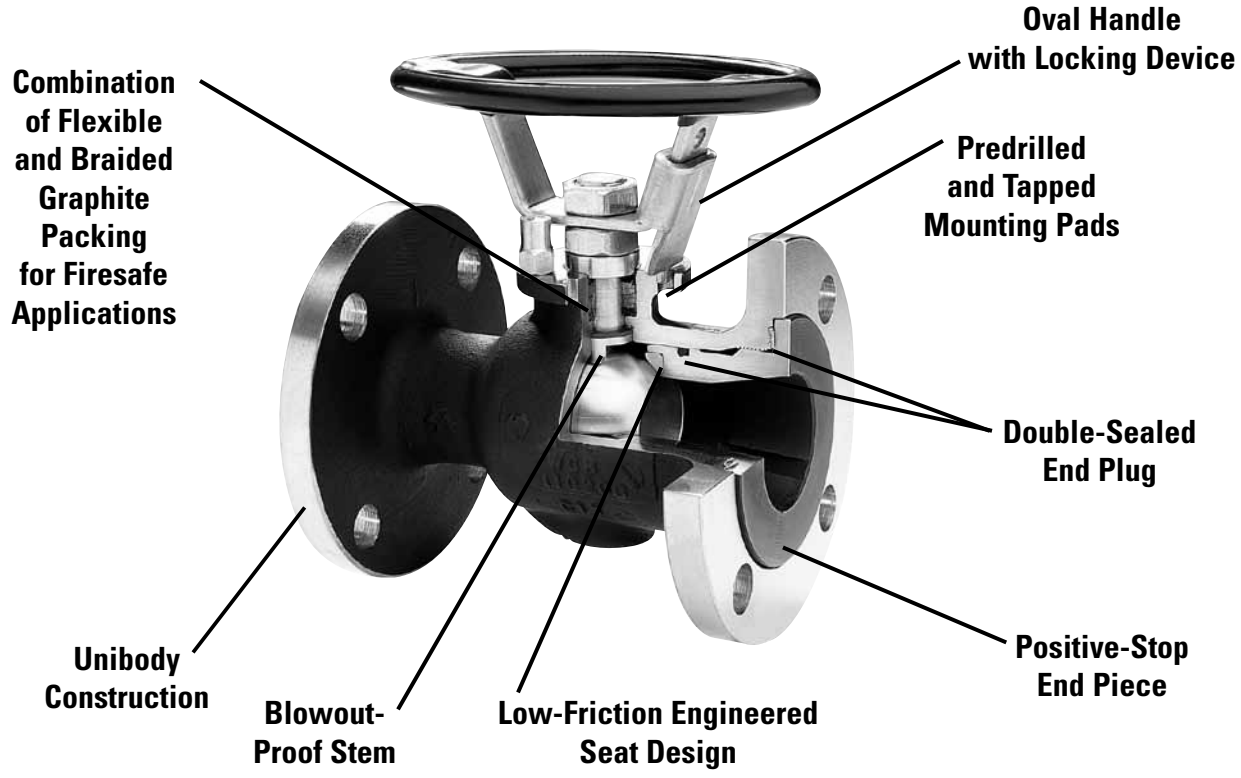

NIBCO INC. WORLD HEADQUARTERS • 1516 MIDDLEBURY ST. • ELKHART, IN 46516-4740 • USA • PH: 1.800.234.0227
TECH SERVICES PH: 1.888.446.4226 • FAX: 1.888.336.4226 • INTERNATIONAL OFFICE PH: +1.574.295.3327 • FAX: +1.574.295.3455
www.nibco.com

Flanged Ball Valves

The Positive Solution For All Your Flow Control Applications.

Split-Body Full-Bore Flanged Ball Valves

- Split-body design allows greater serviceability – disassembles easily for repair or replacement of internal components.
- Full-bore design provides exceptional flow control.
- Multiple V-ring packing, combined with live loading, maintains packing compression under high-cycle and severe service applications.

Applicable Standards

NIBCO® flanged ball valves conform to ASME/ANSI B16.34, ANSI B16.5, ANSI B16.10, MSS SP-72, API 598, API 607, API 608 and MSS SP-25.

Special Service Applications

Fire Safe – Secondary metal-to-metal seal acts as backup if primary seal is destroyed by fire. Valves ordered for compliance with API 607 will be provided with graphite packing and gaskets.
Oxygen Service – Valves can be provided cleaned and bagged for oxygen or other special services.

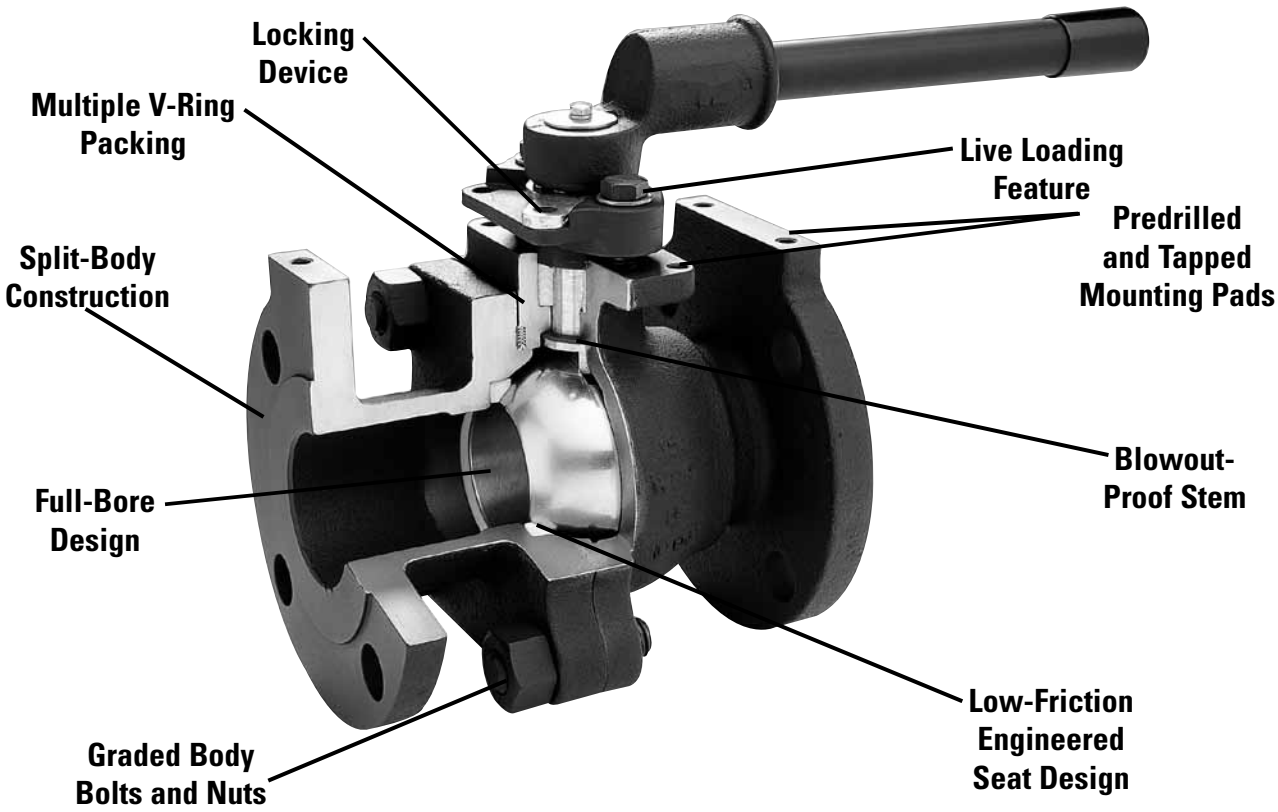

Class 150 Carbon Steel Flanged Ball Valves

Unibody Design • Blowout-Proof Stem • 316 SS Trim • Mounting Pad • Fire Safe • Vented Ball

285 PSI/19.7 Bar Non-Shock Cold Working Pressure◆

CONFORMS TO ASME/ANSI B16.34, B16.5, MSS SP 72, API 607 FOURTH EDITION, API 608, API 598, MSS SP 25

F-510-CS-R-66-FS
Carbon x Stainless
Flanged

MATERIAL LIST

PART	SPECIFICATION
1. [1]Body and End Piece	Carbon Steel ASTM A 216 Type WCB
2. [1]Ball (Vented)	Stainless Steel ASTM A 351 Type CF8M
3. Stem	Stainless Steel ASTM A 276 Type 316
4. Seat	Reinforced PTFE
5. Packing Set	Graphite and Braided Graphite
6. Pack Gland	Stainless Steel 304 SS
7. Pack Gland Nut	Carbon Steel Plated
8. O-Ring	Fluorocarbon Encapsulated
9. Gasket	304 SS/Graphite Spiral Wound

[1] **Cast specifications shown. Smaller sizes may be manufactured from equivalent bar stock specifications.**

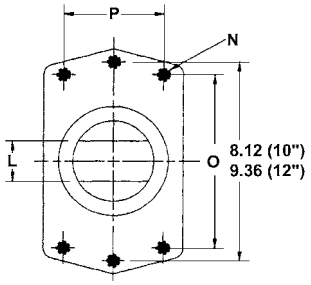

TOP FLANGE FOR
10" & 12"

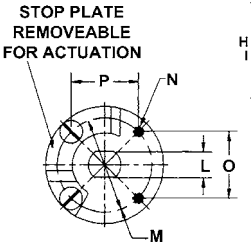

TOP FLANGE FOR
3" THRU 8"

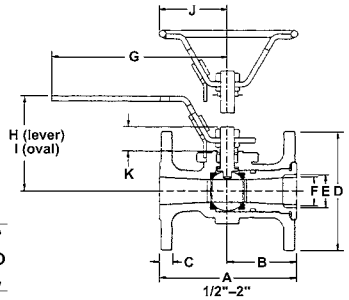

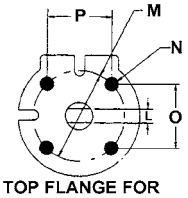

TOP FLANGE FOR
1/2" THRU 2"

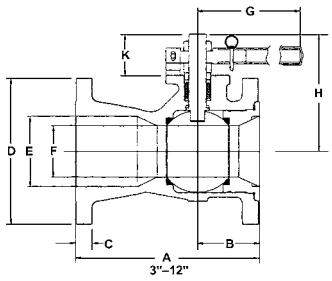

DIMENSIONS—WEIGHTS—QUANTITIES

Size		Dimensions																F-510-CS-R-66-FS	
		A		B		C		D		E		F		G		H			
In.	mm.	In.	mm.	In.	mm.	In.	mm.	In.	mm.	In.	mm.	In.	mm.	In.	mm.	In.	mm.	Lbs.	Kg.
½	15	4.25	108	2.13	54	.47	12	3.56	90	.50	13	.43	11	6.63	168	2.84	72	3.00	1.36
¾	20	4.63	118	2.31	50	.47	12	3.94	100	.75	19	.63	16	6.63	168	3.20	81	5.00	2.27
1	25	5.00	127	2.50	54	.47	12	4.31	109	1.00	25	.81	21	6.63	168	3.45	88	6.00	2.72
1½	40	6.50	165	3.25	83	.56	14	5.00	127	1.50	38	1.19	30	9.13	232	4.75	121	13.00	5.91
2	50	7.00	178	3.00	76	.62	16	6.00	132	2.00	51	1.50	38	9.13	232	4.88	124	17.00	7.73
3	80	8.00	203	4.00	102	.75	19	7.50	191	3.00	76	2.38	60	16.60	422	6.16	156	42.00	19.09
4	100	9.00	229	4.25	108	.94	24	9.00	229	4.00	102	3.00	76	16.60	422	7.22	183	64.00	29.09
6	150	10.50	267	5.25	133	1.00	25	11.00	279	6.00	152	4.38	111	32.80	833	10.09	256	126.00	57.27
8	200	11.50	297	5.50	140	1.13	29	13.50	343	8.00	203	5.68	144	—	—	—	—	198.00	90.00
10	250	13.00	330	6.50	165	1.19	30	16.00	406	10.00	254	7.50	190	—	—	—	—	296.00	134.55
12	300	14.00	356	7.38	187	1.25	32	19.00	483	12.00	305	9.50	241	—	—	—	—	477.00	216.82

Size		Dimensions																				F-510-CS-R-66-FS	
		I		J		K		L		M			O			P						
In.	mm.	In.	mm.	In.	mm.	In.	mm.	In.	mm.	In.	mm.	N	In.	mm.		In.	mm.					Lbs.	Kg.
½	15	3.16	80	2.56	65	.59	15	.25	6	1.68	43	.250-20	1.19	30		1.19	30					3.00	1.36
¾	20	3.58	91	2.56	65	.76	19	.25	6	1.68	43	.250-20	1.19	30		1.19	30					5.00	2.27
1	25	3.83	97	2.56	65	.93	24	.31	8	1.68	43	.250-20	1.19	30		1.19	30					6.00	2.72
1½	40	5.25	133	3.31	84	1.22	31	.56	14	2.06	52	.250-20	1.46	37		1.46	37					13.00	5.91
2	50	5.38	137	3.31	84	1.36	35	.56	14	2.06	52	.250-20	1.46	37		1.46	37					17.00	7.73
3	80	—	—	—	—	1.97	50	.68	17	3.00	76	.375-16	2.12	54		2.12	54					42.00	19.09
4	100	—	—	—	—	2.16	55	.68	17	3.00	76	.375-16	2.12	54		2.12	54					64.00	29.09
6	150	—	—	—	—	3.59	91	1.13	29	4.50	114	.500-13	3.18	81		3.18	81					126.00	57.27
8	200	—	—	—	—	3.43	87	1.13	29	4.50	114	.500-13	3.18	81		3.18	81					198.00	90.00
10	250	—	—	—	—	5.56	141	1.75	44	—	—	.625-11	7.24	184		3.66	93					296.00	134.55
12	300	—	—	—	—	5.63	143	2.00	31	—	—	.625-11	8.10	205		4.68	119					477.00	216.82

Note: Valves are static grounded by thrust washer.

◆For detailed Operating Pressure, refer to Pressure Temperature Chart on page 81.

NIBCO INC. WORLD HEADQUARTERS • 1516 MIDDLEBURY ST. • ELKHART, IN 46516-4740 • USA • PH: 1.800.234.0227
TECH SERVICES PH: 1.888.446.4226 • FAX: 1.888.336.4226 • INTERNATIONAL OFFICE PH: +1.574.295.3327 • FAX: +1.574.295.3455
www.nibco.com

Class 300 Carbon Steel Flanged Ball Valves

Unibody Design • Blowout-Proof Stem • 316 SS Trim • Mounting Pad • Fire Safe • Vented Ball

740 PSI/51 Bar Non-Shock Cold Working Pressure◆

CONFORMS TO ASME/ANSI B16.34, B16.5, MSS SP 72, API 607 FOURTH EDITION, API 608, API 598, MSS SP 25

F-530-CS-R-66-FS
Carbon x Stainless
Flanged

MATERIAL LIST

	PART	SPECIFICATION
1.	[1]Body and End Piece	Carbon Steel ASTM A 216 Type WCB
2.	[1]Ball (Vented)	Stainless Steel ASTM A 351 Type CF8M
3.	Stem	Stainless Steel ASTM A 276 Type 316
4.	Seat	Reinforced PTFE
5.	Packing Set	Graphite and Braided Graphite
6.	Pack Gland	Stainless Steel 304 SS
7.	Pack Gland Nut	Carbon Steel Plated
8.	O-Ring	Fluorocarbon Encapsulated
9.	Gasket	304 SS/Graphite Spiral Wound

[1] Cast specifications shown. Smaller sizes may be manufactured from equivalent bar stock specifications.

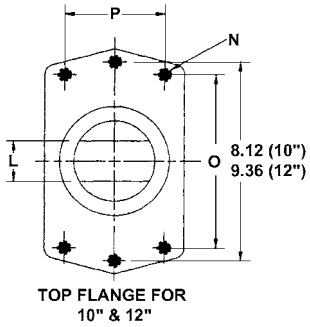

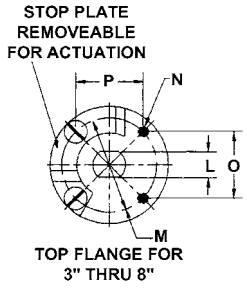

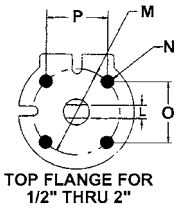

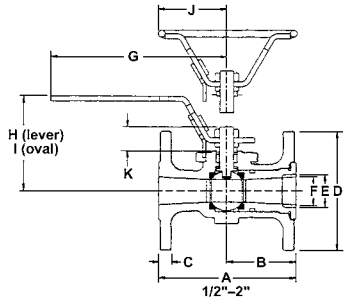

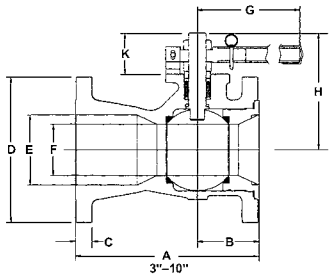

DIMENSIONS—WEIGHTS—QUANTITIES

Size		Dimensions A		B		C		D		E		F		G		H		I		J		K		L		M		N	O		P		F-530-CS-R-66-FS	
In.	mm.	In.	mm.	In.	mm.	In.	mm.	In.	mm.	In.	mm.	In.	mm.	In.	mm.	In.	mm.	In.	mm.	In.	mm.	In.	mm.	In.	mm.	In.	mm.		In.	mm.	In.	mm.	Lbs.	Kg.
½	15	5.50	140	2.13	54	.59	15	3.81	97	.50	13	.43	11	6.63	168	2.84	72	3.16	80	2.56	65	.59	15	.25	6	1.68	43	.250-20	1.19	30	1.19	30	5.00	2.27
¾	20	6.00	152	2.31	59	.65	17	4.68	119	.75	19	.63	16	6.63	168	3.20	81	3.58	91	2.56	65	.76	19	.25	6	1.68	43	.250-20	1.19	30	1.19	30	8.00	3.64
1	25	6.50	165	2.50	64	.71	18	4.94	125	1.00	25	.81	21	6.63	168	3.45	88	3.83	97	2.56	65	.93	24	.31	8	1.68	43	.250-20	1.19	30	1.19	30	10.00	4.55
1½	40	7.50	191	3.25	83	.81	21	6.13	156	1.50	33	1.19	30	9.13	232	4.75	121	5.25	133	3.31	84	1.22	31	.56	14	2.06	52	.250-20	1.46	37	1.46	37	20.00	9.09
2	50	8.50	216	3.00	76	.87	22	6.50	165	2.00	51	1.50	38	9.13	232	4.88	124	5.38	137	3.31	84	1.36	35	.56	14	2.06	52	.250-20	1.46	37	1.46	37	23.00	10.45
3	80	11.13	283	4.00	102	1.13	29	8.25	210	3.00	76	2.38	60	16.60	422	6.16	156	—	—	—	—	1.97	50	.68	17	3.00	76	.375-16	2.12	54	2.12	54	54.00	24.55
4	100	12.00	305	4.25	103	1.25	32	10.00	254	4.00	102	3.00	76	16.60	422	7.22	183	—	—	—	—	2.16	55	.68	17	3.00	76	.375-16	2.12	54	2.12	54	91.50	41.59
6	150	15.88	403	5.25	133	1.44	37	12.50	318	6.00	152	4.38	111	32.80	833	10.09	256	—	—	—	—	3.59	91	1.13	29	4.50	114	.500-13	3.18	81	3.18	81	181.50	82.50
8	200	16.50	419	5.50	140	1.63	41	15.00	381	8.00	203	5.68	144	—	—	—	—	—	—	—	—	3.43	87	1.13	29	4.50	114	.500-13	3.18	81	3.18	81	257.00	116.82
10	250	18.00	457	6.50	165	1.88	48	17.50	443	10.00	254	7.50	190	—	—	—	—	—	—	—	—	5.56	141	1.75	44	—	—	.625-11	7.24	184	3.66	93	429.00	195.00

Note: Valves are static grounded by thrust washer.

◆For detailed Operating Pressure, refer to Pressure Temperature Chart on page 81.

Class 150 Carbon Steel Flanged Ball Valves

Split-Body, Full-Bore Design • Blowout-Proof Stem • 316 SS Trim •
Multiple V-Ring Packing • Mounting Pad • Fire Safe • Vented Ball

285 PSI/19.7 Bar Non-Shock Cold Working Pressure◆

CONFORMS TO ASME/ANSI B16.34, B16.5, MSS SP 72,
API 607 FOURTH EDITION, API 608, API 598,
MSS SP 25

F-515-CS-F-66-FS
Carbon x Stainless
Flanged

MATERIAL LIST

	PART	SPECIFICATION
1.	[1]Body and End Piece	Carbon Steel ASTM A 216 Type WCB
2.	[1]Ball (Vented)	Stainless Steel ASTM A 351 Type CF8M
3.	Stem	Stainless Steel ASTM A 276 Type 316
4.	Seat	Carbon Filled PTFE
5.	Packing Set	Graphite and Braided Graphite
6.	Pack Gland	Carbon Steel Plated
7.	Gasket	304 SS/Graphite Spiral Wound
8.	Body Stud	Carbon Steel A 193 Grade B7M
9.	Heavy Hex Body Nut	Carbon Steel A 194 Grade 2HM
10.	Belleville Washer	Stainless Steel

[1]Cast specifications shown. Smaller sizes may be manufactured from equivalent bar stock specifications.

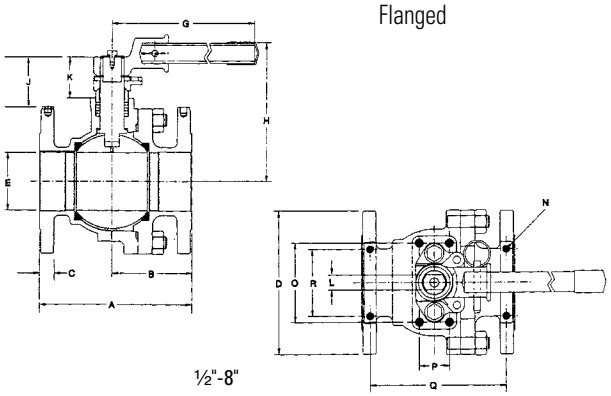

½"-8"

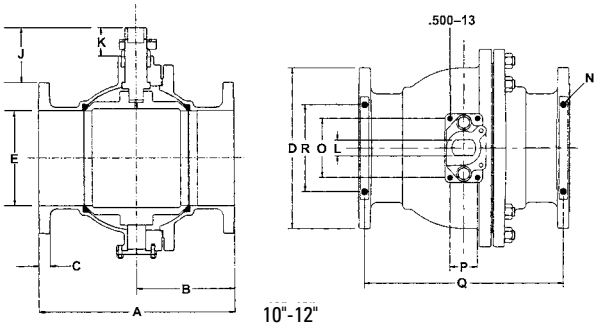

10"-12"

DIMENSIONS—WEIGHTS—QUANTITIES

Size		Dimensions									
		A		B		C		D		E	
In.	mm.	In.	mm.	In.	mm.	In.	mm.	In.	mm.	In.	mm.
½	15	4.25	108	2.52	64	.44	11	3.50	89	.59	15
¾	20	4.63	118	2.74	70	.50	13	3.88	99	.78	20
1	25	5.00	127	2.80	71	.56	14	4.25	109	.98	25
1½	40	6.50	165	3.54	90	.56	14	5.00	127	1.57	40
2	50	7.00	178	3.99	101	.62	16	6.00	152	2.00	51
3	80	8.00	203	4.19	106	.75	19	7.50	190	3.00	76
4	100	9.00	229	4.50	114	.94	24	9.00	229	4.00	102
6	150	15.50	394	8.00	203	1.00	25	11.00	279	6.00	152
8	200	18.00	457	9.00	229	1.12	28	13.50	343	8.00	203
10	250	21.00	533	10.50	267	1.19	30	16.00	406	10.08	256
12	300	24.00	670	12.00	305	1.25	32	19.00	483	12.09	307

Size		Dimensions																				F-515-CS-F-66-FS	
		G		H		J		K		L			O		*P		Q		R				
In.	mm.	In.	mm.	In.	mm.	In.	mm.	In.	mm.	In.	mm.	N	In.	mm.	In.	mm.	In.	mm.	In.	mm.		Lbs.	Kg.
½	15	5.12	130	3.52	89	.47	12	1.00	25	.19	5	.250-20	—	—	—	—	3.75	95	2.00	51		4.00	1.82
¾	20	6.10	155	4.13	105	.69	18	1.26	32	.31	8	.250-20	—	—	—	—	3.94	100	2.00	51		6.00	2.72
1	25	6.10	155	4.25	109	.63	17	1.26	32	.31	8	.312-18	—	—	—	—	4.19	105	1.75	44		8.00	3.64
1½	40	9.06	230	4.97	126	1.50	38	1.68	43	.47	12	.312-18	—	—	—	—	5.63	143	1.75	44		17.00	7.73
2	50	9.03	230	5.66	144	1.81	46	1.66	42	.63	16	.312-18	—	—	—	—	6.32	161	2.25	57		26.00	11.82
3	80	12.63	321	7.38	187	2.65	67	2.13	54	.78	20	.375-16	4.13	105	1.57	40	7.12	181	3.50	89		49.00	22.27
4	100	15.75	400	8.09	205	2.59	66	2.13	54	.78	20	.437-14	4.13	105	1.57	40	8.00	203	4.00	102		75.00	34.09
6	150	31.50	800	10.65	271	3.68	93	2.58	66	1.10	28	.437-14	4.96	126	2.36	60	14.44	367	4.00	102		171.00	77.73
8	200	—	—	—	—	4.53	115	2.53	65	1.17	30	.500-13	4.96	126	2.36	60	16.81	427	7.62	104		322.00	146.36
10	250	—	—	—	—	5.83	148	3.01	76	1.57	40	.625-11	5.90	150	2.75	70	19.75	502	8.66	220		483.00	219.55
12	300	—	—	—	—	5.69	145	3.01	76	1.57	40	.625-11	5.90	150	2.75	70	22.69	576	9.45	240		659.00	298.55

***Not drilled and tapped on ½"-2".**

Note: Valves are static grounded by thrust washer.

◆For detailed Operating Pressure, refer to Pressure Temperature Chart on page 81.

NIBCO INC. WORLD HEADQUARTERS • 1516 MIDDLEBURY ST. • ELKHART, IN 46516-4740 • USA • PH: 1.800.234.0227
TECH SERVICES PH: 1.888.446.4226 • FAX: 1.888.336.4226 • INTERNATIONAL OFFICE PH: +1.574.295.3327 • FAX: +1.574.295.3455
www.nibco.com

Class 300 Carbon Steel Flanged Ball Valves

Split-Body, Full-Bore Design • Blowout-Proof Stem • 316 SS Trim •
Multiple V-Ring Packing • Mounting Pad • Fire Safe • Vented Ball

740 PSI/51 Bar Non-Shock Cold Working Pressure◆

CONFORMS TO ASME/ANSI B16.34, B16.5, MSS SP 72,
API 607 FOURTH EDITION, API 608, API 598,
MSS SP 25

MATERIAL LIST

	PART	SPECIFICATION
1.	[1]Body and End Piece	Carbon Steel ASTM A 216 Type WCB
2.	[1]Ball (Vented)	Stainless Steel ASTM A 351 Type CF8M
3.	Stem	Stainless Steel ASTM A 276 Type 316
4.	Seat	Carbon Filled PTFE
5.	Packing Set	Graphite and Braided Graphite
6.	Pack Gland	Carbon Steel Plated
7.	Gasket	304 SS/Graphite Spiral Wound
8.	Body Stud	Carbon Steel A 193 Grade B7M
9.	Heavy Hex Body Nut	Carbon Steel A 194 Grade 2HM
10.	Belleville Washer	Stainless Steel

[1] Cast specifications shown. Smaller sizes may be manufactured from equivalent bar stock specifications.

F-535-CS-F-66-FS
Carbon x Stainless
Flanged

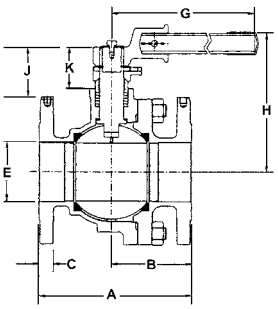

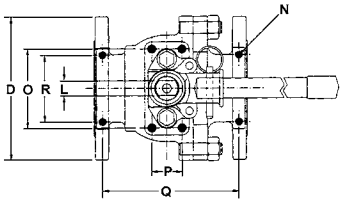

½"-8"

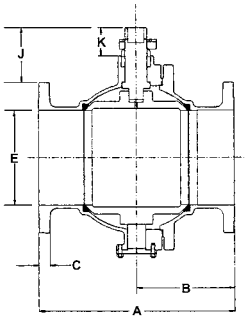

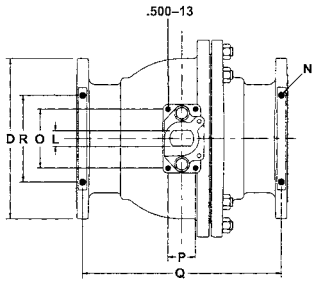

10"-12"

DIMENSIONS—WEIGHTS—QUANTITIES

Size		Dimensions A		B		C		D		E		G		H		J		K		L		N	O		*P		Q		R		F-535-CS-F-66-FS	
In.	mm.	In.	mm.	In.	mm.	In.	mm.	In.	mm.	In.	mm.	In.	mm.	In.	mm.	In.	mm.	In.	mm.	In.	mm.		In.	mm.	In.	mm.	In.	mm.	In.	mm.	Lbs.	Kg.
½	15	5.50	140	3.14	80	.56	14	3.75	95	.59	15	5.12	130	3.52	89	.34	9	1.00	25	.19	5	.250-20	—	—	—	—	4.85	123	2.00	51	7.00	3.18
¾	20	6.00	152	3.43	87	.62	16	4.63	118	.78	20	6.10	155	4.13	105	.43	11	1.26	32	.31	8	.250-20	—	—	—	—	5.28	134	2.00	51	9.00	4.09
1	25	6.50	165	3.55	90	.69	18	4.88	124	.98	25	6.10	155	4.25	109	.45	11	1.26	32	.31	8	.312-18	—	—	—	—	5.69	145	1.75	44	11.00	5.00
1 ½	40	7.50	191	4.13	105	.81	21	6.13	156	1.57	40	9.06	230	4.97	126	.92	23	1.68	43	.47	12	.312-18	—	—	—	—	6.56	167	1.75	44	24.50	11.14
2	50	8.50	216	4.74	120	.88	22	6.50	165	2.00	51	9.06	230	5.66	144	1.58	40	1.66	42	.63	16	.312-18	—	—	—	—	7.50	191	2.25	57	33.00	15.00
3	80	11.12	253	5.56	141	1.12	28	8.25	210	3.00	76	15.75	400	7.38	187	2.26	57	2.13	54	.78	20	.375-16	4.13	105	1.57	40	9.94	252	3.50	89	72.00	32.73
4	100	12.00	305	6.01	156	1.25	32	10.00	254	4.00	102	15.75	400	8.09	205	2.10	53	2.13	54	.78	20	.437-14	4.13	105	1.57	40	10.69	272	4.00	102	116.00	52.73
6	150	15.87	403	7.96	202	1.44	37	12.50	318	6.00	152	—	—	—	—	2.93	74	2.58	66	1.10	28	.437-14	4.96	126	2.36	60	14.38	365	4.00	102	228.00	103.64
8	200	19.75	502	9.87	251	1.62	41	15.00	381	8.00	203	—	—	—	—	4.43	113	2.53	65	1.17	30	.500-13	4.96	126	2.36	60	18.06	459	6.46	154	352.00	160.00
10	250	22.38	569	11.19	234	1.88	48	17.50	445	10.08	256	—	—	—	—	5.08	129	3.01	76	1.57	40	.625-11	5.90	150	2.75	70	20.43	514	8.66	220	560.00	254.53
12	300	25.50	649	12.75	324	2.00	51	20.50	521	12.09	307	—	—	—	—	4.97	126	3.01	76	1.57	40	.625-11	5.90	150	2.75	70	23.44	595	9.45	240	765.00	347.73

***Not drilled and tapped on ½"-2".**

Note: Valves are static grounded by thrust washer.

◆For detailed Operating Pressure, refer to Pressure Temperature Chart on page 81.

One and Two-Piece Stainless Steel Ball Valves Illustrated Index

Unibody Stainless Steel Flanged Ball Valve
ANSI Class 150

F-510-S6-R-66-FS
Sizes ½" thru 12"
Flanged
Page 77

Unibody Stainless Steel Flanged Ball Valve
ANSI Class 300

F-530-S6-R-66-FS
Sizes ½" thru 12"
Flanged
Page 78

Split-Body Stainless Steel Flanged Ball Valve
ANSI Class 150

F-515-S6-F-66-FS
Sizes ½" thru 12"
Flanged
Page 79

Split-Body Stainless Steel Flanged Ball Valve
ANSI Class 300

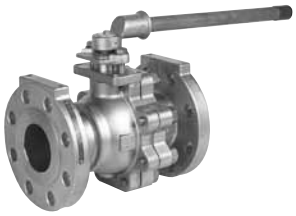

F-535-S6-F-66-FS
Sizes ½" thru 12"
Flanged
Page 80

Pressure Temperature Chart

Page 81

NIBCO INC. WORLD HEADQUARTERS • 1516 MIDDLEBURY ST. • ELKHART, IN 46516-4740 • USA • PH: 1.800.234.0227
TECH SERVICES PH: 1.888.446.4226 • FAX: 1.888.336.4226 • INTERNATIONAL OFFICE PH: +1.574.295.3327 • FAX: +1.574.295.3455
www.nibco.com

Class 150 Stainless Steel Flanged Ball Valves

Unibody Design • Blowout-Proof Stem • 316 SS Trim • Mounting Pad • Fire Safe • Vented Ball

275 PSI/19 Bar Non-Shock Cold Working Pressure◆

CONFORMS TO ASME/ANSI B16.34, B16.5, MSS SP 72, API 607 FOURTH EDITION, API 608, API 598, MSS SP 25

MATERIAL LIST

	PART	SPECIFICATION
1.	[1]Body and End Piece	Stainless Steel ASTM A 351 Type CF8M
2.	[1]Ball (Vented)	Stainless Steel ASTM A 351 Type CF8M
3.	Stem	Stainless Steel ASTM A 276 Type 316
4.	Seat	Reinforced PTFE
5.	Packing Set	Graphite and Braided Graphite
6.	Pack Gland	Stainless Steel 304 SS
7.	Pack Gland Nut	Stainless Steel
8.	O-Ring	Fluorocarbon Encapsulated
9.	Gasket	304 SS/Graphite Spiral Wound

[1] Cast specifications shown. Smaller sizes may be manufactured from equivalent bar stock specifications.

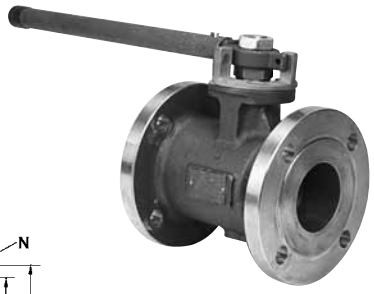

F-510-S6-R-66-FS
Stainless x Stainless
Flanged

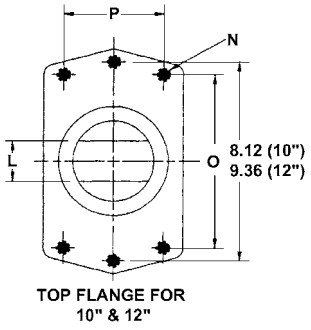

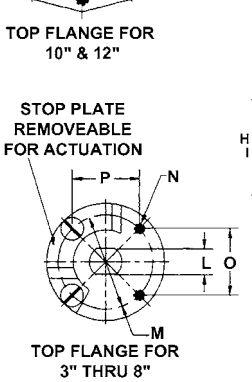

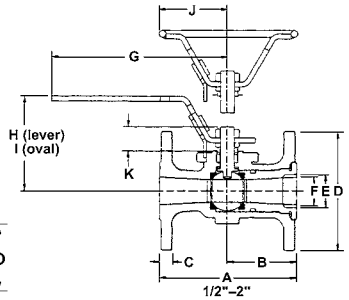

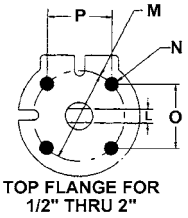

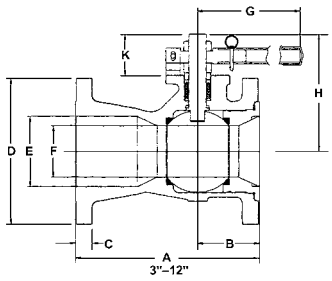

DIMENSIONS—WEIGHTS—QUANTITIES

Size		Dimensions																F-510-S6-R-66-FS	
		A		B		C		D		E		F		G		H			
In.	mm.	In.	mm.	In.	mm.	In.	mm.	In.	mm.	In.	mm.	In.	mm.	In.	mm.	In.	mm.	Lbs.	Kg.
½	15	4.25	108	2.13	54	.47	12	3.56	90	.50	13	.43	11	6.63	168	2.84	72	3.00	1.36
¾	20	4.63	118	2.31	50	.47	12	3.94	100	.75	19	.63	16	6.63	168	3.20	81	5.00	2.27
1	25	5.00	127	2.50	54	.47	12	4.31	109	1.00	25	.81	21	6.63	168	3.45	88	6.00	2.72
1½	40	6.50	165	3.25	83	.56	14	5.00	127	1.50	38	1.19	30	9.13	232	4.75	121	13.00	5.91
2	50	7.00	178	3.00	76	.62	16	6.00	132	2.00	51	1.50	38	9.13	232	4.88	124	17.00	7.73
3	80	8.00	203	4.00	102	.75	19	7.50	191	3.00	76	2.38	60	16.60	422	6.16	156	42.00	19.09
4	100	9.00	229	4.25	108	.94	24	9.00	229	4.00	102	3.00	76	16.60	422	7.22	183	64.00	29.09
6	150	10.50	267	5.25	133	1.00	25	11.00	279	6.00	152	4.38	111	32.80	833	10.09	256	126.00	57.27
8	200	11.50	297	5.50	140	1.13	29	13.50	343	8.00	203	5.68	144	—	—	—	—	198.00	90.00
10	250	13.00	330	6.50	165	1.19	30	16.00	406	10.00	254	7.50	190	—	—	—	—	296.00	134.55
12	300	14.00	356	7.38	187	1.25	32	19.00	483	12.00	305	9.50	241	—	—	—	—	477.00	216.82

Size		Dimensions																					
		I		J		K		L		M			O			P						
In.	mm.	In.	mm.	In.	mm.	In.	mm.	In.	mm.	In.	mm.	N	In.	mm.		In.	mm.						
½	15	3.16	80	2.56	65	.59	15	.25	6	1.68	43	.250-20	1.19	30		1.19	30						
¾	20	3.58	91	2.56	65	.76	19	.25	6	1.68	43	.250-20	1.19	30		1.19	30						
1	25	3.83	97	2.56	65	.93	24	.31	8	1.68	43	.250-20	1.19	30		1.19	30						
1½	40	5.25	133	3.31	84	1.22	31	.56	14	2.06	52	.250-20	1.46	37		1.46	37						
2	50	5.38	137	3.31	84	1.36	35	.56	14	2.06	52	.250-20	1.46	37		1.46	37						
3	80	—	—	—	—	1.97	50	.68	17	3.00	76	.375-16	2.12	54		2.12	54						
4	100	—	—	—	—	2.16	55	.68	17	3.00	76	.375-16	2.12	54		2.12	54						
6	150	—	—	—	—	3.59	91	1.13	29	4.50	114	.500-13	3.18	81		3.18	81						
8	200	—	—	—	—	3.43	87	1.13	29	4.50	114	.500-13	3.18	81		3.18	81						
10	250	—	—	—	—	5.56	141	1.75	44	—	—	.625-11	7.24	184		3.66	93						
12	300	—	—	—	—	5.63	143	2.00	31	—	—	.625-11	8.10	205		4.68	119						

Note: Valves are static grounded by thrust washer.

◆For detailed Operating Pressure, refer to Pressure Temperature Chart on page 81.

Class 300 Stainless Steel Flanged Ball Valves

Unibody Design • Blowout-Proof Stem • 316 SS Trim • Mounting Pad • Fire Safe • Vented Ball

720 PSI/50 Bar Non-Shock Cold Working Pressure◆

CONFORMS TO ASME/ANSI B16.34, B16.5, MSS SP 72, API 607 FOURTH EDITION, API 608, API 598, MSS SP 25

F-530-S6-R-66-FS
Stainless x Stainless
Flanged

MATERIAL LIST

	PART	SPECIFICATION
1.	[1]Body and End Piece	Stainless Steel ASTM A 351 Type CF8M
2.	[1]Ball (Vented)	Stainless Steel ASTM A 351 Type CF8M
3.	Stem	Stainless Steel ASTM A 276 Type 316
4.	Seat	Reinforced PTFE
5.	Packing Set	Graphite and Braided Graphite
6.	Pack Gland	Stainless Steel 304 SS
7.	Pack Gland Nut	Stainless Steel
8.	O-Ring	Fluorocarbon Encapsulated
9.	Gasket	304 SS/Graphite Spiral Wound

[1] Cast specifications shown. Smaller sizes may be manufactured from equivalent bar stock specifications.

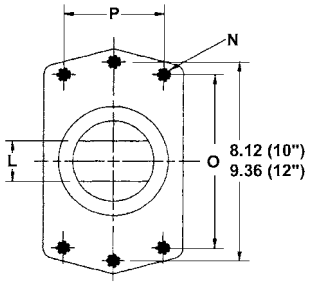

TOP FLANGE FOR
10" & 12"

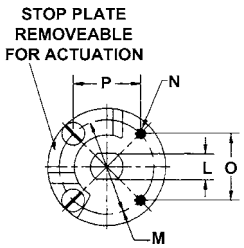

TOP FLANGE FOR
3" THRU 8"

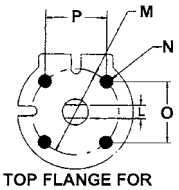

TOP FLANGE FOR
1/2" THRU 2"

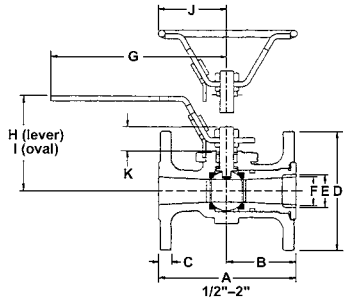

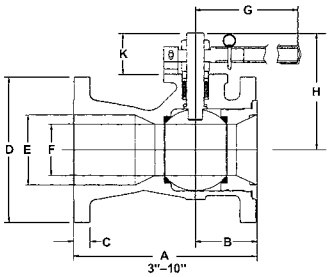

DIMENSIONS—WEIGHTS—QUANTITIES

Size		Dimensions A		B		C		D		E		F		G		H		I		J		K		L		M		N	O		P		F-530-S6-R-66-FS	
In.	mm.	In.	mm.	In.	mm.	In.	mm.	In.	mm.	In.	mm.	In.	mm.	In.	mm.	In.	mm.	In.	mm.	In.	mm.	In.	mm.	In.	mm.	In.	mm.		In.	mm.	In.	mm.	Lbs.	Kg.
½	15	5.50	140	2.13	54	.59	15	3.81	97	.50	13	.43	11	6.63	168	2.84	72	3.16	80	2.56	65	.59	15	.25	6	1.68	43	.250-20	1.19	30	1.19	30	5.00	2.27
¾	20	6.00	152	2.31	59	.65	17	4.68	119	.75	19	.63	16	6.63	168	3.20	81	3.58	91	2.56	65	.76	19	.25	6	1.68	43	.250-20	1.19	30	1.19	30	8.00	3.64
1	25	6.50	165	2.50	64	.71	18	4.94	125	1.00	25	.81	21	6.63	168	3.45	88	3.83	97	2.56	65	.93	24	.31	8	1.68	43	.250-20	1.19	30	1.19	30	10.00	4.55
1 ½	40	7.50	191	3.25	83	.81	21	6.13	156	1.50	33	1.19	30	9.13	232	4.75	121	5.25	133	3.31	84	1.22	31	.56	14	2.06	52	.250-20	1.46	37	1.46	37	20.00	9.09
2	50	8.50	216	3.00	76	.87	22	6.50	165	2.00	51	1.50	38	9.13	232	4.88	124	5.38	137	3.31	84	1.36	35	.56	14	2.06	52	.250-20	1.46	37	1.46	37	23.00	10.45
3	80	11.13	283	4.00	102	1.13	29	8.25	210	3.00	76	2.38	60	16.60	422	6.16	156	—	—	—	—	1.97	50	.68	17	3.00	76	.375-16	2.12	54	2.12	54	54.00	24.55
4	100	12.00	305	4.25	108	1.25	32	10.00	254	4.00	102	3.00	76	16.60	422	7.22	183	—	—	—	—	2.16	55	.68	17	3.00	76	.375-16	2.12	54	2.12	54	91.50	41.59
6	150	15.88	403	5.25	133	1.44	37	12.50	318	6.00	152	4.38	111	—	—	—	—	—	—	—	—	3.59	91	1.13	29	4.50	114	.500-13	3.18	81	3.18	81	181.50	82.50
8	200	16.50	419	5.50	140	1.63	41	15.00	381	8.00	203	5.68	144	—	—	—	—	—	—	—	—	3.43	87	1.13	29	4.50	114	.500-13	3.18	81	3.18	81	257.00	116.82
10	250	18.00	457	6.50	165	1.88	48	17.50	443	10.00	254	7.50	190	—	—	—	—	—	—	—	—	5.56	141	1.75	44	—	—	.625-11	7.24	184	3.66	93	429.00	195.00

Note: Valves are static grounded by thrust washer.

◆For detailed Operating Pressure, refer to Pressure Temperature Chart on page 81.

NIBCO INC. WORLD HEADQUARTERS • 1516 MIDDLEBURY ST. • ELKHART, IN 46516-4740 • USA • PH: 1.800.234.0227
TECH SERVICES PH: 1.888.446.4226 • FAX: 1.888.336.4226 • INTERNATIONAL OFFICE PH: +1.574.295.3327 • FAX: +1.574.295.3455
www.nibco.com

Class 150 Stainless Steel Flanged Ball Valves

Split-Body, Full-Bore Design • Blowout-Proof Stem • 316 SS Trim •
Multiple V-Ring Packing • Mounting Pad • Fire Safe • Vented Ball

275 PSI/19 Bar Non-Shock Cold Working Pressure◆

F-515-S6-F-66-FS
Stainless x Stainless
Flanged

CONFORMS TO ASME/ANSI B16.34, B16.5, MSS SP 72,
API 607 FOURTH EDITION, API 608, API 598,
MSS SP 25

MATERIAL LIST

	PART	SPECIFICATION
1.	Body and End Piece	Stainless Steel ASTM A 351 Type CF8M
2.	[1]Ball (Vented)	Stainless Steel ASTM A 351 Type CF8M
3.	Stem	Stainless Steel ASTM A 276 Type 316
4.	Seat	Reinforced PTFE
5.	Packing Set	Graphite and Braided Graphite
6.	Pack Gland	Stainless Steel ASTM A 276 Type 316
7.	Gasket	304 SS/Graphite Spiral Wound
8.	Body Stud	Stainless Steel ASTM A 193 Grade B8 SS
9.	Heavy Hex Body Nut	Stainless Steel ASTM A 194 Grade 8 SS
10.	Belleville Washer	Stainless Steel

[1] Cast specifications shown. Smaller sizes may be manufactured from equivalent bar stock specifications.

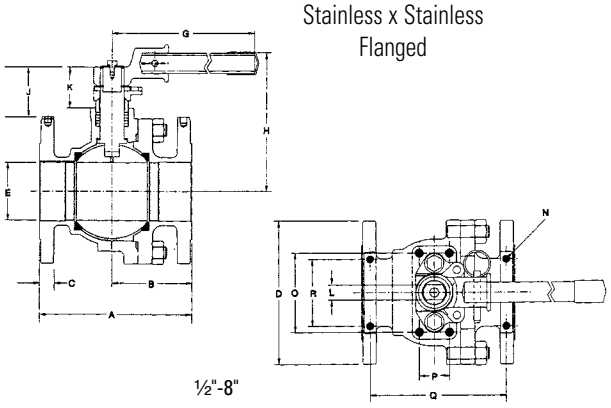

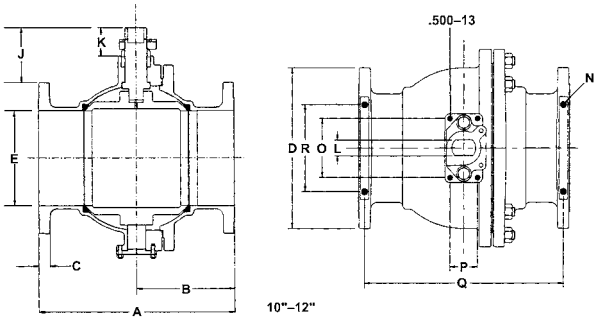

DIMENSIONS—WEIGHTS—QUANTITIES

Size		Dimensions A		B		C		D		E		G		H		J		K		L		N	O		*P		Q		R		F-515-S6-F-66-FS	
In.	mm.	In.	mm.	In.	mm.	In.	mm.	In.	mm.	In.	mm.	In.	mm.	In.	mm.	In.	mm.	In.	mm.	In.	mm.		In.	mm.	In.	mm.	In.	mm.	In.	mm.	Lbs.	Kg.
½	15	4.25	108	2.52	64	.44	11	3.50	89	.59	15	5.12	130	3.52	89	.47	12	1.00	25	.19	5	.250-20	—	—	—	—	3.75	95	2.00	51	4.00	1.82
¾	20	4.63	118	2.74	70	.50	13	3.88	99	.78	20	6.10	155	4.13	105	.69	18	1.26	32	.31	8	.250-20	—	—	—	—	3.94	100	2.00	51	6.00	2.72
1	25	5.00	127	2.80	71	.56	14	4.25	108	.98	25	6.10	155	4.25	108	.63	17	1.26	32	.31	8	.312-18	—	—	—	—	4.19	105	1.75	44	8.00	3.64
1 ½	40	6.50	165	3.54	90	.56	14	5.00	127	1.57	40	9.06	230	4.97	126	1.50	38	1.68	43	.47	12	.312-18	—	—	—	—	5.63	143	1.75	44	17.00	7.73
2	50	7.00	178	3.99	101	.62	16	6.00	152	2.00	51	9.06	230	5.66	144	1.81	46	1.66	42	.63	16	.312-18	—	—	—	—	6.32	161	2.25	57	26.00	11.82
3	80	8.00	203	4.19	106	.75	19	7.50	190	3.00	76	12.63	321	7.38	187	2.65	67	2.13	54	.78	20	.375-16	4.13	105	1.57	40	7.12	181	3.50	89	49.00	22.27
4	100	9.00	229	4.50	114	.94	24	9.00	229	4.00	102	15.75	400	8.09	205	2.59	66	2.13	54	.78	20	.437-14	4.13	105	1.57	40	8.00	203	4.00	102	75.00	34.09
6	150	15.50	394	8.00	203	1.00	25	11.00	279	6.00	152	31.50	800	10.65	271	3.68	93	2.58	66	1.10	28	.437-14	4.96	126	2.36	60	14.44	367	4.00	102	171.00	77.73
8	200	18.00	457	9.00	229	1.12	28	13.50	343	8.00	203	—	—	—	—	4.53	115	2.53	65	1.17	30	.500-13	4.96	126	2.36	60	16.81	427	7.62	104	322.00	146.36
10	250	21.00	533	10.50	267	1.19	30	16.00	406	10.08	256	—	—	—	—	5.83	148	3.01	76	1.57	40	.625-11	5.90	150	2.75	70	19.75	502	8.66	220	483.00	219.55
12	300	24.00	670	12.00	305	1.25	32	19.00	483	12.09	307	—	—	—	—	5.69	145	3.01	76	1.57	40	.625-11	5.90	150	2.75	70	22.69	576	9.45	240	659.00	298.55

***Not drilled and tapped on ½"-2".**

Note: Valves are static grounded by thrust washer.

◆For detailed Operating Pressure, refer to Pressure Temperature Chart on page 81.

Class 300 Stainless Steel Flanged Ball Valves

Split-Body, Full-Bore Design • Blowout-Proof Stem • 316 SS Trim •
Multiple V-Ring Packing • Mounting Pad • Fire Safe • Vented Ball

720 PSI/50 Bar Non-Shock Cold Working Pressure◆

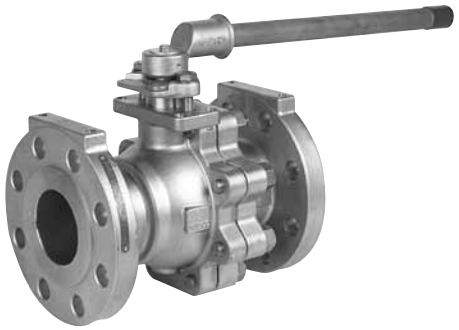

F-535-S6-F-66-FS
Stainless x Stainless
Flanged

CONFORMS TO ASME/ANSI B16.34, B16.5, MSS SP 72,
API 607 FOURTH EDITION, API 608, API 598,
MSS SP 25

MATERIAL LIST

	PART	SPECIFICATION
1.	Body and End Piece	Stainless Steel ASTM A 351 Type CF8M
2.	[1]Ball (Vented)	Stainless Steel ASTM A 351 Type CF8M
3.	Stem	Stainless Steel ASTM A 276 Type 316
4.	Seat	Carbon Filled PTFE
5.	Packing Set	Graphite and Braided Graphite
6.	Pack Gland	Stainless Steel ASTM A 276 Type 316
7.	Gasket	304 SS/Graphite Spiral Wound
8.	Body Stud	Stainless Steel ASTM A 193 Grade B8 SS
9.	Heavy Hex Body Nut	Stainless Steel ASTM A 194 Grade 8 SS
10.	Belleville Washer	Stainless Steel

[1] Cast specifications shown. Smaller sizes may be manufactured from equivalent bar stock specifications.

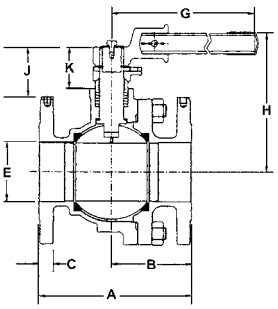

½"-8"

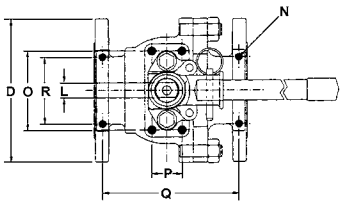

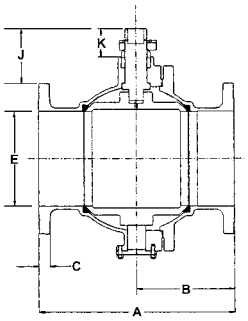

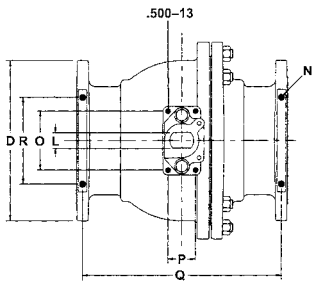

10"-12"

DIMENSIONS—WEIGHTS—QUANTITIES

Size		Dimensions A		B		C		D		E		G		H		J		K		L		N	O		*P		Q		R		F-535-S6-F-66-FS	
In.	mm.	In.	mm.	In.	mm.	In.	mm.	In.	mm.	In.	mm.	In.	mm.	In.	mm.	In.	mm.	In.	mm.	In.	mm.		In.	mm.	In.	mm.	In.	mm.	In.	mm.	Lbs.	Kg.
½	15	5.50	140	3.14	80	.56	14	3.75	95	.59	15	5.12	130	3.52	89	.34	9	1.00	25	.19	5	.250-20	—	—	—	—	4.85	123	2.00	51	7.00	3.18
¾	20	6.00	152	3.43	81	.62	16	4.63	118	.78	20	6.10	155	4.13	105	.43	11	1.26	32	.31	8	.250-20	—	—	—	—	5.28	134	2.00	51	9.00	4.09
1	25	6.50	165	3.55	90	.69	18	4.88	124	.98	25	6.10	155	4.25	108	.45	11	1.26	32	.31	8	.312-18	—	—	—	—	5.69	145	1.75	44	11.00	5.00
1 ½	40	7.50	191	4.13	105	.81	21	6.13	156	1.57	40	9.06	230	4.97	126	.92	23	1.68	43	.47	12	.312-18	—	—	—	—	6.56	167	1.75	44	24.50	11.14
2	50	8.50	216	4.74	120	.88	22	6.50	165	2.00	51	9.06	230	5.66	144	1.58	40	1.66	42	.63	16	.312-18	—	—	—	—	7.50	191	2.25	57	33.00	15.00
3	80	11.12	253	5.56	141	1.12	28	8.25	210	3.00	76	15.75	400	7.38	187	2.26	57	2.13	54	.78	20	.375-16	4.13	105	1.57	40	9.94	252	3.50	89	72.00	32.73
4	100	12.00	305	6.01	156	1.25	32	10.00	254	4.00	102	15.75	400	8.09	205	2.10	53	2.13	54	.78	20	.437-14	4.13	105	1.57	40	10.69	272	4.00	102	116.00	52.73
6	150	15.87	403	7.96	202	1.44	37	12.50	318	6.00	152	—	—	—	—	2.93	74	2.58	66	1.10	28	.437-14	4.96	126	2.36	60	14.38	365	4.00	102	228.00	103.64
8	200	19.75	502	9.87	251	1.62	41	15.00	381	8.00	203	—	—	—	—	4.43	113	2.53	65	1.17	30	.500-13	4.96	126	2.36	60	18.06	459	6.46	154	352.00	160.00
10	250	22.38	569	11.19	234	1.88	48	17.50	445	10.08	256	—	—	—	—	5.08	129	3.01	76	1.57	40	.625-11	5.90	150	2.75	70	20.43	514	8.66	220	560.00	254.53
12	300	25.50	649	12.75	324	2.00	51	20.50	521	12.09	307	—	—	—	—	4.97	126	3.01	76	1.57	40	.625-11	5.90	150	2.75	70	23.44	595	9.45	240	765.00	347.73

***Not drilled and tapped on ½"-2".**

Note: Valves are static grounded by thrust washer.

◆For detailed Operating Pressure, refer to Pressure Temperature Chart on page 81.

NIBCO INC. WORLD HEADQUARTERS • 1516 MIDDLEBURY ST. • ELKHART, IN 46516-4740 • USA • PH: 1.800.234.0227
TECH SERVICES PH: 1.888.446.4226 • FAX: 1.888.336.4226 • INTERNATIONAL OFFICE PH: +1.574.295.3327 • FAX: +1.574.295.3455
www.nibco.com

Pressure Temperature Ratings

for NIBCO® Flanged Ball Valve Seat Materials

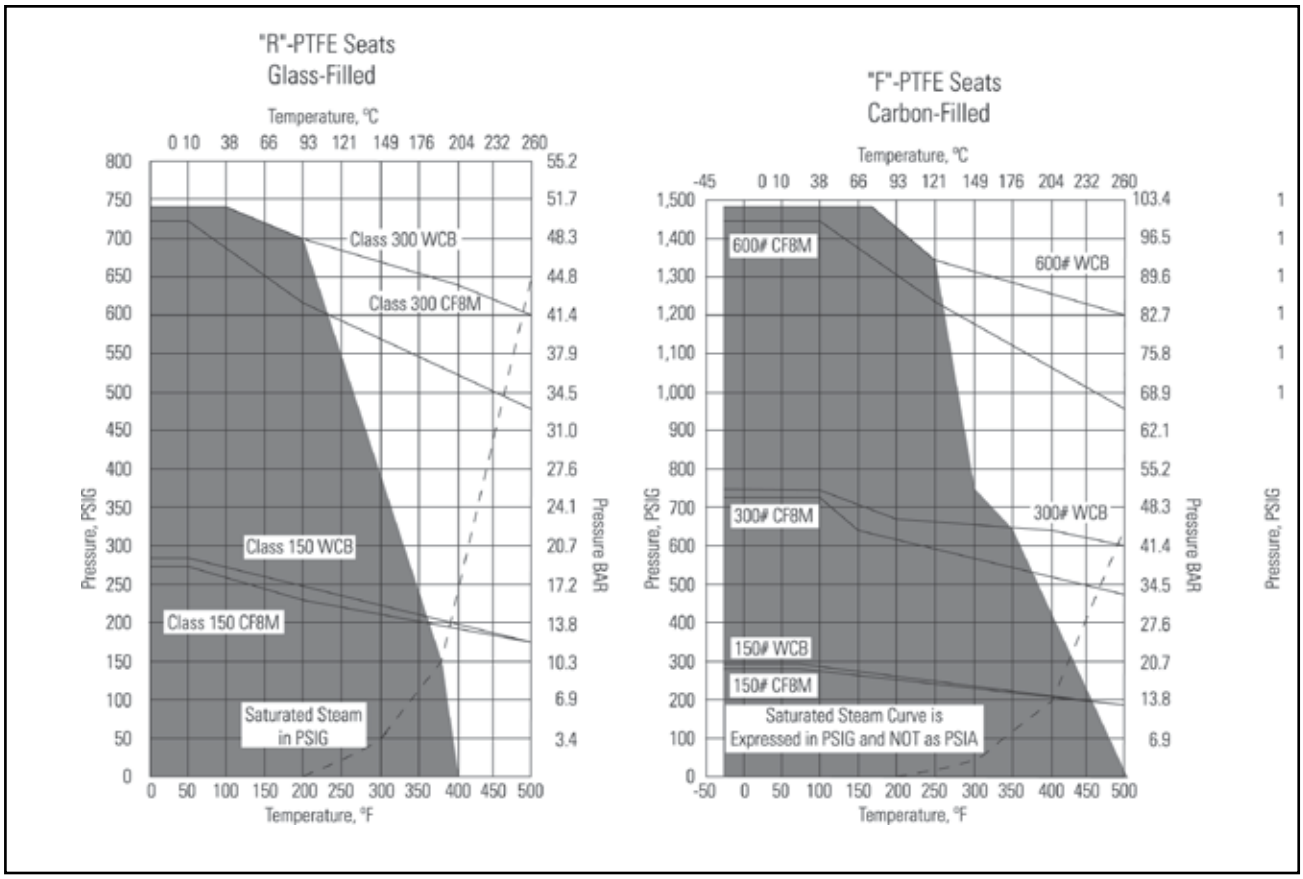

Shaded area refers to recommended seat rating.

Bronze, Carbon and Stainless Steel Ball Valves

Options and Accessories Index

Bronze Threaded, Solder and Grooved Ball Valves 83-85
Handle Options 83
NIB-SEAL® Technical Data 84
Stainless Steel Ball and Stem 85
Oxygen Service 85
Vented Ball 85
Use of Silicone 85
Static Grounding 85
Actuation 85

Carbon and Stainless Steel Threaded, Socket and Butt Weld Ball Valves 86
Handle Options 86
Stainless Steel Ball and Stem 86
Vented Ball 86
Use of Silicone 86
Static Grounding 86
Fire Rated 86
Actuation 86

Carbon and Stainless Steel Flanged Ball Valves 87
Handle Options 87
Stainless Steel Ball and Stem 87
Oxygen Service 87
Vented Ball 87
Use of Silicone 87
Static Grounding 87
Fire Rated 87
Actuation 87

Quick Reference Chart for Ball Valve Options and Accessories 88

Ball Valve Seat Materials 89-90

NIBCO INC. WORLD HEADQUARTERS • 1516 MIDDLEBURY ST. • ELKHART, IN 46516-4740 • USA • PH: 1.800.234.0227
TECH SERVICES PH: 1.888.446.4226 • FAX: 1.888.336.4226 • INTERNATIONAL OFFICE PH: +1.574.295.3327 • FAX: +1.574.295.3455
www.nibco.com

Bronze Threaded, Solder and Grooved Ball Valves

Handle Options and Accessories

A wide variety of handles are available to fulfill safety and operation requirements in various processing and manufacturing industries. The lever handle with plastic cover is standard. Other handle options are shown. Stainless steel lever handles are available, as an option, also with plastic covers. If an optional handle is desired, please indicate which one when ordering. Many of these options are field assembly only.

CS Standard Lever Handle

CS Extended Lever Handle with Memory Stop Allows for 2" of Insulation

NIB-SEAL® Handle Allows for 2" of Insulation

CS Locking Lever Handle

CS Round Handle

Vertical Chain Lever

SS Standard Lever Handle

CS Extended Round Handle Allows for 2" of Insulation

Horizontal Chain Lever

SS Locking Lever Handle

CS Wing Handle

Memory Stop Kit

CS Extended Lever Handle Allows for 2" of Insulation

Seat and Seal Kit

Bronze Threaded, Solder, NIBCO® Press System® and Grooved Ball Valves

NIB-SEAL® Technical Data

NIBCO bronze ball valves installed with NIB-SEAL® insulated handles are the only approach that keeps your insulated piping system completely intact.

The revolutionary NIB-SEAL® insulated handle system used with a NIBCO bronze ball valve, stops condensate, cold. Its unique thermal barrier design keeps moisture from infiltrating your insulated system while preventing thermal energy loss through exposed metal handles.

Designed for new installations or retrofitting existing systems, NIB-SEAL® bronze ball valves offer a wide range of advantages for typical commercial HVAC systems as well as industrial applications where insulated piping is desirable.

In addition, the NIB-SEAL® handle was tested to UL 2043 and is UL listed for installation in air-handling spaces (plenums).

- Protective sleeve provides a stationary surface to affix the insulation, allowing operation of the valve without destroying the integrity of the insulated system.
- High-strength cylindrical handle design features easy access to standard adjustable memory stop for system balancing.
- Cap and insulating plug provide a vapor seal to prevent exchange of air, to maximize the efficiency of your insulated piping system.
- Position indicators allow at-a-glance determination of whether valve is in open or closed position.
- Preformed hole allows for convenient tagging.

Cap keeps moisture-laden air out to reduce chance of condensate formation

Insulation plug provides vapor seal, keeping air from infiltrating the insulated system

Handle nut

Indicator gives at-a-glance valve position

Memory stop plate and screws for system balancing

Preformed hole for identification tag

Extension handle of durable non-thermal conductive CPVC prevents formation of condensation

Protective sleeve allows operation of valve handle and maintenance of valve packing while maintaining integrity of piping insulation

NIBCO two-piece or three-piece bronze ball valve is an integral part of the NIB-SEAL valve system

Temperature range: 15° F to 250° F

Not intended for steam applications in excess of 15 PSI

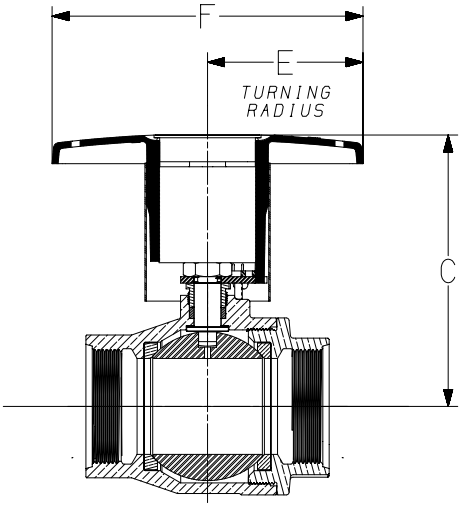

	Dimensions					
	Valve Series 580-70*/590*			Valve Series 585-70/595		
Size	C	E	F	C	E	F
.250	—	—	—	3.750	2.188	4.25
.375	—	—	—	3.750	2.188	4.25
.500	3.750	2.188	4.25	3.750	2.188	4.25
.750	3.750	2.188	4.25	4.000	2.188	4.25
1.000	4.000	2.188	4.25	4.25	2.188	4.25
1.250	4.250	2.188	4.25	5.375	3.375	6.50
1.500	5.375	3.375	6.50	5.563	3.375	6.50
2.000	5.563	3.375	6.50	5.875	3.375	6.50
2.500	5.875	3.375	6.50	—	—	—

*Use 585-70/595 for 1/4" - 1"

For bronze ball valves with factory-installed NIB-SEAL® insulated handle, order appropriate NIBCO valve figure number with suffix "NS."

Example: T-585-70-NS, 1/2"

NIB-SEAL on sweat ball valves are shipped unassembled.

Sample Specification

For piping systems requiring up to 2" of insulation, specify a non-conductive CPVC extended-handle bronze ball valve tested to UL 2043, is UL listed for installation in air handling spaces (plenums),that offers a vapor seal, adjustable memory stop, position indicators and convenient valve packing maintenance—all without disturbing the insulation. Specify NIB-SEAL® insulated handle.

Example: T-585-70-NS

NIBCO INC. WORLD HEADQUARTERS • 1516 MIDDLEBURY ST. • ELKHART, IN 46516-4740 • USA • PH: 1.800.234.0227
TECH SERVICES PH: 1.888.446.4226 • FAX: 1.888.336.4226 • INTERNATIONAL OFFICE PH: +1.574.295.3327 • FAX: +1.574.295.3455
www.nibco.com

Bronze Threaded, Solder and Grooved Ball Valves

Options and Accessories (continued)

Stainless Steel Ball and Stem

316 stainless steel ball and stem are available on many NIBCO® ball valves – see catalog specification sheets to identify what valves are available or consult factory.

Oxygen Service

Many NIBCO ball valves are available for oxygen service. Cleaned and packaged in durable, sealed plastic bags to avoid contamination. Oxygen cleaned valves are not recommended for pressures exceeding 200 PSI. The steps involved are as follows: 1) Clean ultrasonically all component parts with a degreaser in a warm water solution. 2) Rinse with warm water in an ultrasonic bath. Rinse again in cold water. 3) Put all component parts under black light for inspection of any carbon. If carbon is found, repeat steps above. 4) Assemble and test valves. 5) Package the valves in a sealed plastic bag to avoid contamination.

Vented Ball

NIBCO provides vented balls as standard on all carbon and stainless steel ball valves and bronze T-560s with stainless steel balls. For other bronze ball valves, vented balls are only available with stainless steel trim option – see catalog specification sheets to identify what valves are available or consult factory.

Static Grounding

NIBCO provides static grounding standard on most carbon, stainless steel and bronze three-piece ball valves. See product pages for availability.

Actuation

Engineered with a modular approach, NIBCO® electric and pneumatic actuation systems give you flexibility to actuate new valves or retrofit existing valves. NIBCO electric actuators, and NDA and NSR pneumatic actuators feature ISO standard mount and drive (exception is 800 series).

No Silicone Used – Silicone Free Issue

All NIBCO® pressure-rated bronze gate, globe, check and bronze ball valves are manufactured at NIBCO plants in Nacogdoches, Texas, and Reynosa, Mexico. Silicone is not used in these plants in the production of valves or assembly of any component parts of the above listed products.

Note: Valves that are assembled and tested without silicone lubricants in these plants have a potential exposure to air-borne silicone as well as during shipping after they leave the plant. Therefore, NIBCO cannot certify valves produced in the Nacogdoches or Reynosa plants to be 100% silicone free.

Carbon and Stainless Steel Threaded, Socket and Butt Weld Ball Valves Options and Accessories

CS Standard Lever Hdle.

CS Locking Lever Hdle.

SS Standard Lever Hdle.

SS Locking Lever Hdle.

SS Oval Hdle.

SS Locking Oval Hdle.

Seat and Seal Kit
(available for fire safe, "R")

Handle Options

A wide variety of handles are available to fulfill safety and operations requirements in various processing and manufacturing industries. All handles come standard with plastic covers. All carbon steel body ball valves come with carbon steel handles. All stainless steel body ball valves come with stainless steel handles. Many of these options are field assembly only.

Stainless Steel Ball and Stem

316 stainless steel ball and stem are available on many NIBCO® ball valves – see catalog specification sheets to identify what valves are available or consult factory.

Vented Ball

NIBCO provides vented balls as standard on all carbon and stainless steel ball valves and bronze T-560s with stainless steel balls. For other bronze ball valves, vented balls may be available – see catalog specification sheets to identify what valves are available or consult factory.

Fire Rated

Valves feature as standard secondary metal-to-metal seal in the event of the primary seat being destroyed by fire. Valves ordered for compliance with API 607 will be provided with graphite packing. Fire rated/fire safe valves are available in NIBCO® models #s 510, 515, 530, 535, 560, 565 and 590.

Static Grounding

NIBCO provides static grounding standard on most carbon, stainless steel and bronze three-piece ball valves.

Actuation

Engineered with a modular approach, NIBCO® electric and pneumatic actuation systems give you flexibility to actuate new valves or retrofit existing valves. NIBCO electric actuators, and NDA and NSR pneumatic actuators feature ISO standard mount and drive (exception is 800 series).

No Silicone Used – Silicone Free Issue

All NIBCO® pressure rated carbon and stainless steel ball valves are manufactured with no silicone used in the production of valves or assembly of any component parts.

Note: Valves that are assembled and tested without silicone lubricants have a potential exposure to air-borne silicone as well as during shipping after they leave the plant. Therefore, NIBCO cannot certify that our carbon and stainless steel ball valves are 100% silicone free.

NIBCO INC. WORLD HEADQUARTERS • 1516 MIDDLEBURY ST. • ELKHART, IN 46516-4740 • USA • PH: 1.800.234.0227
TECH SERVICES PH: 1.888.446.4226 • FAX: 1.888.336.4226 • INTERNATIONAL OFFICE PH: +1.574.295.3327 • FAX: +1.574.295.3455
www.nibco.com

Carbon and Stainless Steel Flanged Ball Valves

Options and Accessories

CS Oval Locking Hdle.

SS Oval Locking Hdle.

Gear Operator

Seat and Seal Kit
(available in fire safe "F", "N")

Handle Options

A wide variety of handles are available to fulfill safety and operations requirements in various processing and manufacturing industries. All handles come standard with plastic covers. All carbon steel body ball valves come with carbon steel lever handles. All stainless steel body ball valves come with stainless steel lever handles. Many of these options may be field assembly only.

Stainless Steel Ball and Stem

316 stainless steel ball and stem are available on many NIBCO® ball valves – see catalog specification sheets to identify what valves are available or consult factory.

Oxygen Service

Many NIBCO ball valves are available for oxygen service. Cleaned and packaged in durable, sealed plastic bags to avoid contamination. Oxygen cleaned valves are not recommended for pressures exceeding 200 PSI. The steps involved are as follows: 1) Clean ultrasonically all component parts with a degreaser in a warm water solution. 2) Rinse with warm water in an ultrasonic bath. Rinse again in cold water. 3) Put all component parts under black light for inspection of any carbon. If carbon is found, repeat steps above. 4) Assemble and test valves. 5) Package the valves in a sealed plastic bag to avoid contamination.

Vented Ball

NIBCO provides vented balls as standard on all carbon and stainless steel ball valves and bronze T-560s with stainless steel balls. For other bronze ball valves, vented balls may be available – see catalog specification sheets to identify what valves are available or consult factory.

Fire Rated

Valves feature as standard secondary metal-to-metal seal in the event of the primary seat being destroyed by fire. Valves ordered for compliance with API 607 will be provided with graphite packing. Fire rated/fire safe valves are available in NIBCO® models #s 510, 515, 530, 535, 560, 565 and 590.

Static Grounding

NIBCO provides static grounding standard on most carbon, stainless steel and bronze three-piece ball valves.

Actuation

Engineered with a modular approach, NIBCO® electric and pneumatic actuation systems give you flexibility to actuate new valves or retrofit existing valves. NIBCO electric actuators, and NDA and NSR pneumatic actuators feature ISO standard mount and drive (exception is 800 series).

No Silicone Used – Silicone Free Issue

At times NIBCO® standard flanged ball valves may incorporate the use of silicone during assembly. Flanged ball valves can be special ordered as "Assemble-Dry without test." These valves will be assembled not using silicone in the form of grease or aerosol spray.

Note: Even though provisions are made to assemble valves and not incorporate the use of silicone lubricants, the potential for it to be present as air-borne particles prevents us from certifying that our valves are 100% silicone free.

Ball Valve Options

Quick Reference

Std. = Standard
• = Factory Installed
* = Field Retrofit

1 = Not all sizes available, consult factory.
2 = Available on certain models, consult factory.
3 = Specify TM, KM or BM

	Bronze			Carbon Steel						Stainless Steel					Flanged				
Option	**560 -BR**	**580-70 585-70**	**590-Y 595-Y**	**560 -CS**	**570**	**580 -CS**	**TC -580**	**590 -CS**	**595 -CS**	**560 -S6**	**580 -S6**	**585 -S6**	**590 -S6**	**595 -S6**	**510**	**515**	**530**	**535**	**565**
End-Type																			
Threaded	Std.	Std.	Std.	Std.	Std.	Std.	Std.	Std.	Std.	Std.	Std.	Std.	Std.	Std.					
Solder		Std.	Std.																
Grooved			Std.																
Socket Weld								Std.	Std.				Std.	Std.					
Butt Weld								Std.					Std.						
Flanged															Std.	Std.	Std.	Std.	Std.
Seat Material																			
PTFE (Virgin) (-Y)	Std.		Std.																
RPTFE (Glass Filled) (-R)	Std.	Std.		Std.	Std.	Std.	Std.	Std.	Std.	Std.	Std.	Std.	Std.	Std.	Std.		Std.		
FPTFE (Carbon Graphite) (-F)																Std.		Std.	
Nylon (-N)																			Std.
Handles																			
CS Standard Lever Hdle.	Std.	Std.	Std.	Std.	Std.	Std.			Std.						*	*	*	*	*
CS Locking Lever Hdle.		•	•	•	*		Std.	Std.	Std.										
CS Extended Lever Hdle.		*	*1																
CS Extended Lever Hdle. w/memory stop		*1	*1																
CS Round Hdle.	*	*	*1																
CS Extended Round Hdle.		*	*1																
CS Oval Hdle.				•															
CS Locking Oval Hdle.				•											*2		*2		
CS Extended T Hdle.		*	*1																
CS Horizontal Chain Lever Hdle.		•	*																
CS Vertical Chain Lever Hdle.		•	*																
CS Wing Hdle.		*1	*1																
SS Standard Lever Hdle.		*	*						*	Std.		*		Std.	*	*	*	*	*
SS Locking Lever Hdle.	*	*	*	*			*	*	*	•	Std.	Std.	Std.	Std.					
SS Oval Hdle.				*			*	*	*	*	*	*	*	*					
SS Locking Oval Hdle.							*	*	*	•	*	*	*	*	*2		*2		
NIB-SEAL® Hdle.		•	•1																
Memory Stop		•	*1																
Other Options																			
Actuation		*3	*					*	*3	*			*	*3	*	*	*	*	*
Anti-Static/Grounded Stem			Std.$_2$	Std.	Std.	Std.	Std.	Std.	Std.	Std.	Std.	Std.	Std.	Std.	Std.	Std.	Std.	Std.	Std.
Fire Rated				Std.				Std.		Std.			Std.		•	•	•	•	•
Gear Operator															*	*	*	*	*
No Silicone Used	Std.	Std.	Std.	Std.	Std.	Std.	Std.	Std.	Std.	Std.	Std.	Std.	Std.	Std.	•	•	•	•	•
Oxygen Cleaned		•	•												•	•	•	•	•
Seat and Seal Kit Non FS			*						*				*	*					
Seat and Seal Kit FS								*							*	*	*	*	*
SS Trim	•	•	•	•	•	•	•	•	•	Std.	Std.	Std.	Std.	Std.	•	•	•	•	•
Vented Ball		*2		Std.	*1	Std.	Std.	Std.	Std.	Std.	Std.	Std.	Std.	Std.	Std.	Std.	Std.	Std.	Std.

NIBCO INC. WORLD HEADQUARTERS • 1516 MIDDLEBURY ST. • ELKHART, IN 46516-4740 • USA • PH: 1.800.234.0227
TECH SERVICES PH: 1.888.446.4226 • FAX: 1.888.336.4226 • INTERNATIONAL OFFICE PH: +1.574.295.3327 • FAX: +1.574.295.3455
www.nibco.com

Ball Valve Seat Materials

Virgin PTFE

Virgin PTFE is a good all-around, general purpose seating material. PTFE has outstanding resistance to chemical attack by a broad spectrum of organic chemicals, inorganic chemicals and solvents and is generally considered chemically inert. PTFE is a self-lubricating polymer with a very low coefficient of friction, which makes an excellent seating material for quarter-turn ball valves.

Color Code
Virgin PTFE resin has a natural pigment of WHITE.

Temperature Range
-20° to +400° F temperature range in ball valve applications.

Pressure Range
27" vacuum to 600 PSI non-shock water, oil or gas.

Unique Features
Best choice for low pressure sealing, lowest torque of all PTFE polymers.

Typical Applications
Cold and hot potable water, HVAC chilled and hot water. Evaporative cooling systems. Medical gas valves.

NIBCO Figure Number Designation "Y"

Product Availability
T/S-580/580-66
T/S-590/595-Y/66
T-560-BR-Y-20/66
T/S-FP-600

15% Reinforced PTFE

NIBCO uses short strand fiberglass as a reinforcement for our mid-range ball valve products. Adding reinforcement increases the pressure containing capabilities of PTFE by reducing its tendency to cold-flow.

Color Code
15% reinforced PTFE is color coded BLUE. This pigment is permanently molded into the PTFE polymer matrix.

Temperature Range
-20° to +400° F temperature range in ball valve applications.

Pressure Range
27" vacuum to 1,000 PSI non-shock water, oil or gas.

Unique Features
Greater resistance to cold-flow than virgin PTFE.

Typical Applications
Mid-range steam applications. Throttling and balancing of hydronic heating and cooling systems.

NIBCO Figure Number Designation "R"

Product Availability
T/S-580-70/70-66
T/S-585-70/70-66
F-510/530-CS-R/S6-R
TC-580-CS-R
T-560-BR-R-20/66
T-570-CS-R/S6-R
T-580-CS-R/S6-R
T/K-595-CS-R/S6-R
TM/KM/BM-590/595-CS-R/S6-R

Ball Valve Seat Materials

25% Reinforced PTFE

NIBCO uses short strand fiberglass as a reinforcement for our higher pressure carbon steel and alloy ball valve products. Adding reinforcement increases the pressure containing capabilities of PTFE by reducing its tendency to cold-flow.

Color Code
25% reinforced PTFE resin has a color code of RED. This pigment is permanently molded into the PTFE resin matrix.

Temperature Range
-20° to +400° F temperature range in ball valve applications.

Pressure Range
27" vacuum to 2,000 PSI non-shock water, oil or gas.

Unique Features
Improved dimensional stability. Good wear properties.

Typical Applications
Steam service, natural and bottled gas distribution.

NIBCO Figure Number Designation "R"

Product Availability
T-560-CS-R/S6-R

Carbon-Filled PTFE

Carbon-filled PTFE is an excellent seat material for steam applications as well as high efficiency oil-based thermal fluids. Other fillers, including graphite, enable this seat material to have better cycle life than other filled or reinforced PTFE seats. Chemical resistance equal to other PTFE and filled PTFE products.

Color Code
Carbon filled PTFE has a natural pigment of BLACK.

Temperature Range
-20° to +500° F temperature range in ball valve applications.

Pressure Range
27" vacuum to 2,000 PSI non-shock water, oil or gas.

Unique Features
Higher cycle life than other PTFE resins.

Typical Applications
High pressure steam and thermal fluids.

NIBCO Figure Number Designation
"F" (in flanged) and "C" (in threaded).

Product Availability
F-510/530-CS-F/S6-F-66
F-515/535-CS-F/S6-F-66
AT-585-70-66
TM-585-70-66

NIBCO INC. WORLD HEADQUARTERS • 1516 MIDDLEBURY ST. • ELKHART, IN 46516-4740 • USA • PH: 1.800.234.0227
TECH SERVICES PH: 1.888.446.4226 • FAX: 1.888.336.4226 • INTERNATIONAL OFFICE PH: +1.574.295.3327 • FAX: +1.574.295.3455
www.nibco.com

System Control Products Index

Ball Valve Actuation and Control **92**

Circuit Balancing Valves **93**

Ball Valve Actuation Data Sheet **94**

System Control Ball Valves **95-96**

Torque Charts **97-98**

Actuator Mounting Data **99-102**
Three-Way Bronze Full Port T/S-585-W3 Series 99
Two-Piece SS/CS Reduced Port T-580-S6/TC-580-CS-R 100
Three-Piece Bronze Reduced/Full Port T/S-590/595 Series 101
Three-Piece SS/CS Full Port TM/KM/BM-590/595 Series 102

For individual sizing of actuators to ball valves consult your NIBCO technical service representative.

Torque:
Torque is the effective rotary power required by a valve and/or delivered by an actuator. Torque is normally stated in inch/pounds or foot/pounds. This turning force in a ball valve is affected by three factors:

1. Friction of the ball to seat
2. Bearing friction (packing)
3. Dynamic forces (pressure)

Torque = Distance x Force

Breakaway Torque is the total of the three factors listed above. This value is normally the highest required torque to operate a valve and is used in sizing actuators. The torque values listed in the corresponding charts are valid for water and lubricating fluids at ambient temperature. For dry and non-lubricating fluids, consult your NIBCO technical service representative.

Actuator mounting dimensions for flanged ball valves, see pages 72-75.

Ball Valve Actuation and Control

Flexible, Reliable Actuation
Engineered with a modular approach, NIBCO® electric and pneumatic actuation systems give you the flexibility to actuate new valves or to retrofit existing valves with unprecedented ease. Both electric and pneumatic actuation systems feature an ISO standard mounting design, assuring long-term industry acceptance.

Pneumatic Actuation Systems
Ideally suited for most quarter-turn valves, NIBCO® NDA and NSR pneumatic actuators offer exceptional starting and ending torque in a compact design. They consistently meet the demand for high torque, even in applications where the valve has been closed for an extended period.

Engineered for a long, lubrication-free service life, NIBCO NDA and NSR actuators combine O-rings and PTFE seals to create a durable, low-friction seal. They are designed for either on-off duty, modulation or proportional control in industries ranging from chemical processing and pulp and paper, to petroleum refining, production industries, marine applications, and commercial construction applications.

Pneumatic Accessories:
- Three and four way solenoids
- Switch box with limit switches and beacon
- Positioners for throttling service—air or electric signal
- Speed controls

Electric Actuation Systems
For automated or computer-controlled flow control systems, NIBCO electric actuators offer exceptional convenience and flexibility. Ideal for applications where the valve is not readily accessible, these actuators provide a labor-saving alternative to manual flow control regulation.

NIBCO electric actuators operate on the gear reduction motor principle, which allows opening and closing speeds ranging from two seconds to one minute or longer. With reversible motors that are rated for continuous duty, NIBCO electric actuators provide maximum torque output and longer life. They also feature thermal overload protection to safeguard the motor from extreme temperatures.

Electric Actuator Accessories:
- Servo controls
- Extra SPDT switches
- Position transmitter
- Heater and thermostat
- Brake

NIBCO INC. WORLD HEADQUARTERS • 1516 MIDDLEBURY ST. • ELKHART, IN 46516-4740 • USA • PH: 1.800.234.0227
TECH SERVICES PH: 1.888.446.4226 • FAX: 1.888.336.4226 • INTERNATIONAL OFFICE PH: +1.574.295.3327 • FAX: +1.574.295.3455
www.nibco.com

Circuit Balancing Valves

NIBCO Puts You In Control.....
With Circuit Balancing Valves
New NIBCO® Circuit Balancing Valves control and maintain a comfortable indoor climate while saving energy and reducing costs. These control valves ensure trouble-free operation and ease of maintenance.

Why Balance Your System?
Whether a system is designed for heating, cooling or water distribution, it must be properly adjusted and balanced for optimum design performance. An unbalanced system may produce temperature variations of up to 14° F between rooms, which can add up to 35% to energy costs.

What are the Benefits?
- A balanced system ensures a comfortable indoor climate
- The correct flow in boilers and chillers
- The desired flow distribution throughout the building
- Energy savings and cost savings
- Trouble-free operation and ease of maintenance
- Lower capital cost

Series 1710 – DZR Brass Balancing Valves
The 1710 series threaded and solder end range are "T" pattern globe style valves. Unique design features in the 1710 give improved flow measurement accuracy as well as a lower head loss characteristic compared to other valves.

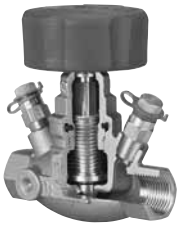

- Memory stop feature provides repeatable regulation and control
- Valve position clearly visible in the hand-wheel display window
- Accurate across all valve positions
- Positive shut-off and isolation
- Dezincification resistant alloy
- ½" through 2" size range

Series 1709 – DZR Brass (Mini) Balancing Valves
Offered in ½" and ¾" solder end configuration only the 1709 series valve is an economical option for circuit balancing. Used in applications where standard size valves just won't fit.

- Globe style for greater control
- Integral test points
- Memory stop feature
- Dezincification resistant alloy

Series 737A – Iron Balancing Valves
The 737A series flanged and grooved end range is from 2½" through 12". Cast iron bodies and ductile iron bonnets are standard.

- Non-rising stem design
- Positive shut-off with EPDM elastomer disc
- Graphite stem sealing
- Linear scale with subdivision increments for accurate position indication
- Discrete memory stop
- Extended test points for easy access of balancing devices

Ball Valve Actuation Data Sheet

To actuate all valves it is necessary to provide certain data to assure proper sizing and prevent damage to the system. Please supply as much data as possible.

I. Valve Information:

A. **Type:** Butterfly ☐ Ball ☐

B. **Fig. No.**_____ Size _____ Qty._____

C. **Type of Fluid in Valve:** _____ Inlet Pressure: _____ Is Fluid: Dry ☐ Wet ☐

Differential Pressure: _____ System Velocity: _____

System GPM: _____ Temperature:_____

II. Actuator Information:

A. **Electric:** Voltage:_____ Time for 90° rotation: _____

Type Enclosure: NEMA 4 ☐ NEMA 7 ☐ Other _____

Special Requirements: Brake ☐ Thermostat ☐ Heater and Thermostat ☐

Manual Override ☐ Extended Duty Motor ☐

Modulating Control ☐ Position Transmitter ☐

Extra SPDT Switches ☐ Potentiometer ☐

B. **Pneumatic:** Air supply to actuator: _____ PSI **(Min. 40 psi, Max. 120 psi)**

Actuator Type: Air-to-Air ☐

Air-to-Spring ☐ Failsafe: Open ☐ Closed ☐

Solenoid: NEMA 4 ☐ NEMA 7 ☐

Switch Box: If so: NEMA 4 ☐ NEMA 7 ☐

Type: SPDT ☐ DPDT ☐ (two each is standard)

Pneumatic Positioner: 3-15 ☐ 4-20 MA ☐

III. Special Notes: _____

Note: If special features are required for actuators such as modulating positioners either for electric or pneumatic actuators, consult factory.

NIBCO INC. WORLD HEADQUARTERS • 1516 MIDDLEBURY ST. • ELKHART, IN 46516-4740 • USA • PH: 1.800.234.0227
TECH SERVICES PH: 1.888.446.4226 • FAX: 1.888.336.4226 • INTERNATIONAL OFFICE PH: +1.574.295.3327 • FAX: +1.574.295.3455
www.nibco.com

Bronze Ball Valves for System Controls Applications

Two-Piece Body • Full Port • 316SS Trim • Blowout-Proof Stem
Pre-assembled with NIBCO Series 2000 Thermoplastic Housed Pneumatic Actuator

600 PSI/41.4 Bar Non-Shock Cold Working Pressure

TM-585-70-66-AP

CONFORMS TO MSS SP-110,
ACTUATOR MOUNT PER ISO 5211

MATERIAL LIST

PART	SPECIFICATION
1. Stem	Stainless Steel ASTM A 276 Type 316
2. O-Ring	Fluoroelastomer
3. Thrust Washer	Reinforced PTFE
4. Seat Ring (2)	Carbon Filled PTFE
5. Ball (Vented)	Stainless Steel ASTM A 276 Type 316 or ASTM A 351 Type CF8M
6. Body	Bronze ASTM B 584 Alloy C84400
7. Body End Piece	Bronze ASTM B 584 Alloy C84400
8. Actuator	Glass Reinforced Polyacrylamide

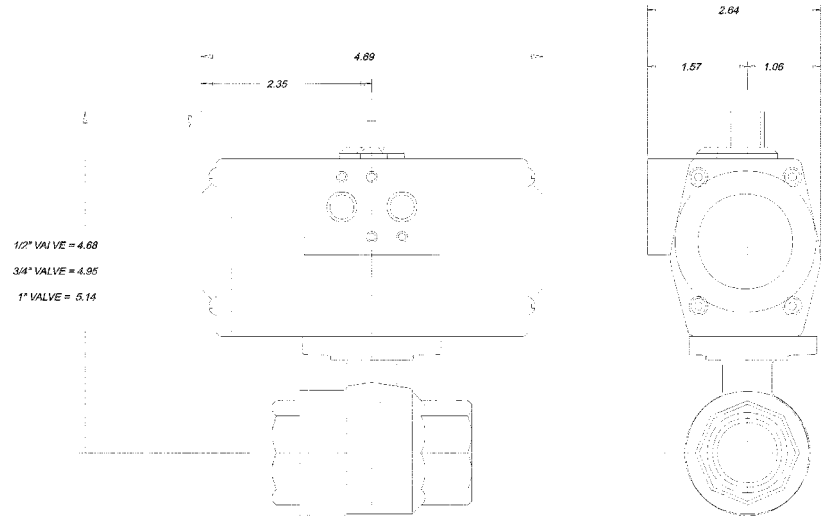

Size	Pressure	Figure Number	Double Acting Actuator	Mount Kit	Figure Number	Spring Return Actuator	Mount Kit
½"	100PSI	TM-585-70-66-AP-NDA	NDA2011F03	T117042	TM-585-70-60-AP-NSR	NSR2011F03 3+3	T117042
½"	600PSI	TM-585-70-66-AP-NDA	NDA2011F03	T117042	TM-585-70-66-AP-NSR	NSR2011F03 3+3	T117042
¾"	100PSI	TM-585-70-66-AP-NDA	NDA2011F03	T117042	TM-585-70-66-AP-NSR	NSR2011F03 3+3	T117042
¾"	600PSI	TM-585-70-66-AP-NDA	NDA2011F03	T117042	TM-585-70-66-AP-NSR	NSR2011F03 3+3	T117042
1"	100PSI	TM-585-70-66-AP-NDA	NDA2011F04	T117043	TM-585-70-66-AP-NSR	NSR2011F04 3+3	T117043
1"	600PSI	TM-585-70-66-AP-NDA	NDA2011F04	T117043	TM-585-70-66-AP-NSR	NSR2011F04 3+3	T117043

Note:

1. Spring Return Actuators are set for 80PSI Air Supply Standard

2. Spring Return Actuators are set for Fail to Close as Standard

3. Specify Size and Figure Number when Ordering

Bronze Ball Valves for System Controls Applications

Two-Piece Body • Reduced Port • 316SS Trim • Blowout-Proof Stem
Reduced Orifice Ball for HVAC Control Applications

600 PSI/41.4 Bar Non-Shock Cold Working Pressure

TM-585-CV
Shown with 24 VDC
Electric Actuator and Universal Mount

CONFORMS TO MSS SP-110,
ACTUATOR MOUNT PER ISO 5211

MATERIAL LIST

	PART	SPECIFICATION
1.	Stem	Stainless Steel ASTM A 276 Type 316
2.	O-Ring (2)	Fluoroelastomer
3.	Thrust Washer	Reinforced PTFE
4.	Seat Ring (2)	Carbon Filled PTFE
5.	Ball	Stainless Steel ASTM A 276 Type 316 or ASTM A 351 Type CF8M
6.	Body	Bronze ASTM B 584 Alloy C84400
7.	Body End Piece	Bronze ASTM B 584 Alloy C84400

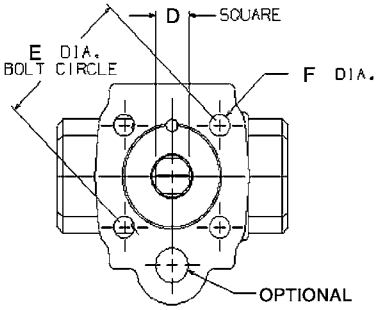

Reduced Orifice Ball – CV Ratings

Size	Figure #	Material #	CV
¾"	TM-585-CV-640	WL95H18	20

Standard Valve

Size	Figure #	Material #	CV
½"	TM-585-70-66	—	15.3
¾"	TM-585-70-66	—	30.4

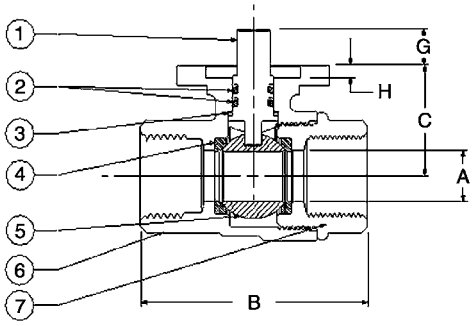

TM-585-CV

DIMENSIONS—WEIGHTS—QUANTITIES

Size		Flange	Dimensions A		B		C		D		E		F		G		H		TM-585-70-66		Master
In.	mm.	Size	In.	mm.	In.	mm.	In.	mm.	In.	mm.	In.	mm.	In.	mm.	In.	mm.	In.	mm.	Lbs.	Kg.	Ctn. Qty.
½	15	F03	.50	13	2.43	62	1.10	28	.35	9	1.42	36	.22	51	.39	10	.12	3	.82	.37	50
¾	20	F03	.75	19	2.94	75	1.37	35	.35	9	1.42	36	.22	51	.39	10	.12	3	1.23	.56	25

NIBCO INC. WORLD HEADQUARTERS • 1516 MIDDLEBURY ST. • ELKHART, IN 46516-4740 • USA • PH: 1.800.234.0227
TECH SERVICES PH: 1.888.446.4226 • FAX: 1.888.336.4226 • INTERNATIONAL OFFICE PH: +1.574.295.3327 • FAX: +1.574.295.3455
www.nibco.com

Ball Valve Torque Charts

Ball Valve Torque Requirements Operating Torque in Inch/Pounds

Figure #	Size	0-100 PSI	101-500 PSI	501-600 PSI
T-560-BR-R/Y	¼"	35	65	65
One-Piece	⅜"	35	65	65
Bronze	½"	35	65	65
Reduced Port	¾"	70	100	100
	1"	130	175	175
	1¼"	175	230	230
	1½"	225	265	265
	2"	370	510	510
580-70	¼"	N/A	N/A	N/A
Two-Piece	⅜"	N/A	N/A	N/A
Bronze	½"	N/A	N/A	N/A
Conventional	¾"	N/A	N/A	N/A
Port	1"	N/A	N/A	N/A
	1¼"	120	185	185
	1½"	185	240	240
	2"	220	300	300
	2½"	250	410	410
	3"	370	540	540
585-70	¼"	30	50	50
Two-Piece	⅜"	30	50	50
Bronze	½"	30	50	50
Full Port	¾"	55	75	75
	1"	90	130	130
	1¼"	120	185	185
	1½"	185	240	240
	2"	220	300	300
	2½"	N/A	N/A	N/A
	3"	N/A	N/A	N/A

Figure #	Size	0-100 PSI	101-500 PSI	501-600 PSI
585-70-W3	½"	42	42	N/A
Three-Way	¾"	67	67	N/A
Bronze	1"	114	114	N/A
Full Port	1¼"	159	159	N/A
Maximum Rating	1½"	218	218	N/A
is 400 PSI CWP	2"	268	268	N/A
TM-585-70-66	½"	25	—	30
Two-Piece	¾"	30	—	40
w/Pad	1"	30	—	50
Bronze	1¼"	55	—	70
Full Port	1½"	55	—	110
	2"	110	—	260
590-Y	¼"	N/A	N/A	N/A
Three-Piece	⅜"	N/A	N/A	N/A
Bronze	½"	N/A	N/A	N/A
Conventional	¾"	N/A	N/A	N/A
Port	1"	N/A	N/A	N/A
	1¼"	125	230	230
	1½"	150	275	275
	2"	170	300	300
	2½"	250	410	410
	3"	370	540	540
595-Y	¼"	45	65	65
Three-Piece	⅜"	45	65	65
Bronze	½"	45	65	65
Full Port	¾"	50	80	80
	1"	125	230	230
	1¼"	150	275	275
	1½"	170	300	300
	2"	250	410	410
	2½"	370	540	540
	3"	N/A	N/A	N/A

Figure #	Size	0-100 PSI	101-500 PSI	501-600 PSI	601-1000 PSI	1001-1500 PSI	1501-2000 PSI
T-560-CS/S6-R	¼"	40	70	75	80	85	100
One-Piece	⅜"	40	70	75	80	85	100
CS/SS	½"	40	70	80	85	90	110
Reduced Port	¾"	75	100	105	110	125	140
	1"	135	190	200	215	245	275
	1¼"	180	240	250	270	290	330
	1½"	225	300	310	330	365	410
	2"	370	460	490	580	685	790
T-570-CS-R	½"	40	65	70	80	90	105
One-Piece	¾"	70	95	100	105	120	135
Bar Stock	1"	125	180	190	205	240	270
CS	1¼"	170	230	240	260	285	320
Reduced Port	1½"	210	285	295	320	355	395
	2"	350	440	470	560	665	770
T-580-CS-R	¼"	40	40	50	55	65	80
Two-Piece	⅜"	40	40	50	55	65	80
CS	½"	75	75	85	95	105	125
Conventional	¾"	100	100	110	120	130	150
Port	1"	120	130	140	150	170	215
	1¼"	165	175	185	200	250	300
	1½"	200	200	220	250	300	350
	2"	290	300	320	350	400	450

Ball Valve Torque Charts

Ball Valve Torque Requirements Operating Torque in Inch/Pounds

Figure #	Size	0-100 PSI	101-500 PSI	501-600 PSI	601-1000 PSI	1001-1500 PSI	1501-2000 PSI
T-580-S6-R	¼"	65	70	75	90	105	125
TC-580-CS-R	⅜"	65	70	75	90	105	125
Two-Piece	½"	65	75	80	95	110	130
CS/SS	¾"	85	100	105	115	130	150
Conventional	1"	100	125	135	150	180	215
Port	1¼"	135	160	170	195	250	300
	1½"	175	200	210	250	300	350
	2"	245	290	305	335	390	450
TM/KM-	¼"	65	70	75	80	—	—
595-CS/S6-R	⅜"	65	70	75	80	—	—
T/K-595-CS/S6-R	½"	75	80	85	100	—	—
Three-Piece	¾"	130	150	165	180	—	—
CS/SS	1"	150	220	230	250	—	—
Full Port	1¼"	250	290	300	325	—	—
	1½"	310	350	365	400	—	—
	2"	390	480	495	550	—	—
TM/KM/BM-	½"	50	50	55	60	75	90
590-CS/S6-R	¾"	85	90	95	100	120	150
Three-Piece	1"	130	140	145	150	170	200
CS/SS	1¼"	175	180	190	210	230	280
Conventional	1½"	275	300	310	325	360	400
Port	2"	325	350	360	385	440	500

Figure #	Size	0-100 PSI	101-285 PSI
F-510	½"	84	98
ANSI Class 150	¾"	120	144
CS/SS	1"	156	180
Uni-Body	1½"	216	240
Flanged	2"	240	336
	3"	480	840
	4"	720	1260
	6"	2220	3540
	8"	5520	8400
	10"	9600	15000
	12"	12000	19500
F-515	½"	108	126
ANSI Class 150	¾"	153	184
CS/SS	1"	186	214
Split-Body	1½"	279	311
Flanged	2"	343	480
	3"	735	1150
	4"	1042	2176
	6"	3182	5303
	8"	7557	14375
	10"	13810	19729
	12"	18859	52804

Figure #	Size	0-100 PSI	101-285 PSI	286-740 PSI
F-530	½"	84	98	144
ANSI Class 300	¾"	120	144	216
CS/SS	1"	156	180	252
Uni-Body	1½"	216	240	456
Flanged	2"	240	336	684
	3"	480	840	3300
	4"	720	1260	4860
	6"	2220	3540	11520
	8"	5520	8400	24600
	10"	9600	15000	37200
	12"	12000	19500	N/A
F-535	½"	108	126	185
ANSI Class 300	¾"	153	184	276
CS/SS	1"	186	214	300
Split-Body	1½"	279	311	590
Flanged	2"	343	480	938
	3"	735	1151	4219
	4"	1042	2176	6221
	6"	3182	5303	15273
	8"	7557	14375	33678
	10"	13810	19729	48927
	12"	18859	52804	56000

Figure #	Size	0-100 PSI	101-285 PSI	286-740 PSI	741-1500 PSI
F-565	1" x 1"	180	—	—	500
ANSI Class 600	1½" x 1½"	250	—	—	700
CS/SS	2" x 2"	350	—	—	1100
Split-Body	3" x 3"	425	—	—	2100
Flanged	4" x 4"	500	—	—	3500

Notes:
1. **Torque values apply to clean fluid at ambient temperatures.**
2. **Other applications may affect above listed values.**
3. **Consult factory for torque values for seat materials other than those listed.**
4. **Handles are not recommended for valves larger than 6". Gear operators or other actuators are recommended.**
5. **This chart is to be used as a guide only. Some variation is possible based on application.**

NIBCO INC. WORLD HEADQUARTERS • 1516 MIDDLEBURY ST. • ELKHART, IN 46516-4740 • USA • PH: 1.800.234.0227
TECH SERVICES PH: 1.888.446.4226 • FAX: 1.888.336.4226 • INTERNATIONAL OFFICE PH: +1.574.295.3327 • FAX: +1.574.295.3455
www.nibco.com

Three-Way Bronze Ball Valves Data for Actuation

NIBCO® No. T-585-W3 Series

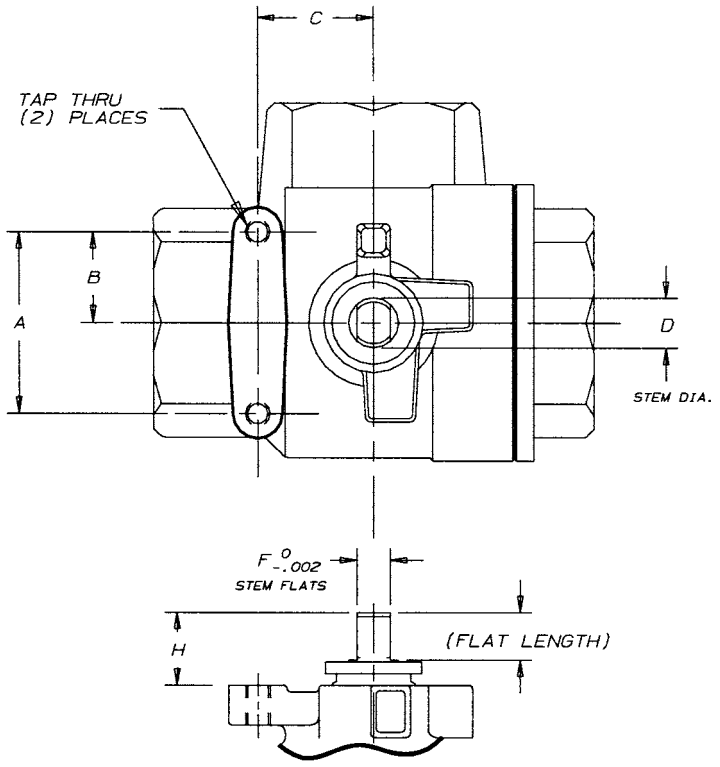

T-585-W3
3-Way Ball Valve

Size		Dimensions															
		A		B		C			D +0 -.003		F +0 -.002		H ±.030		Flat Length	
In.	mm.	In.	mm.	In.	mm.	In.	mm.	Tap Thru	In.	mm.	In.	mm.	In.	mm.	In.	mm.
½	15	1.38	35	.69	17	.88	22	#10-24	.31	8	.22	6	.81	21	.30	8
¾	20	1.38	35	.69	17	.88	22	#10-24	.38	10	.25	6	.95	24	.38	10
1	25	1.38	35	.69	17	.88	22	#10-24	.38	10	.25	6	.93	24	.36	9
1 ¼	32	1.50	38	.75	19	.94	24	.250-20	.56	14	.38	10	1.37	35	.50	13
1 ½	40	1.50	38	.75	19	.94	24	.250-20	.56	14	.38	10	1.36	35	.50	13
2	50	1.50	38	.75	19	.94	24	.250-20	.56	14	.38	10	1.26	32	.57	14

Actuator mounting data for two-piece bronze ball valves with mounting pads – TM-585 series page 23 and AT-580 series page 25.

Two-Piece SS/CS Ball Valves Data for Actuation

NIBCO® No. T-580-S6-R and TC-580-CS-R Series

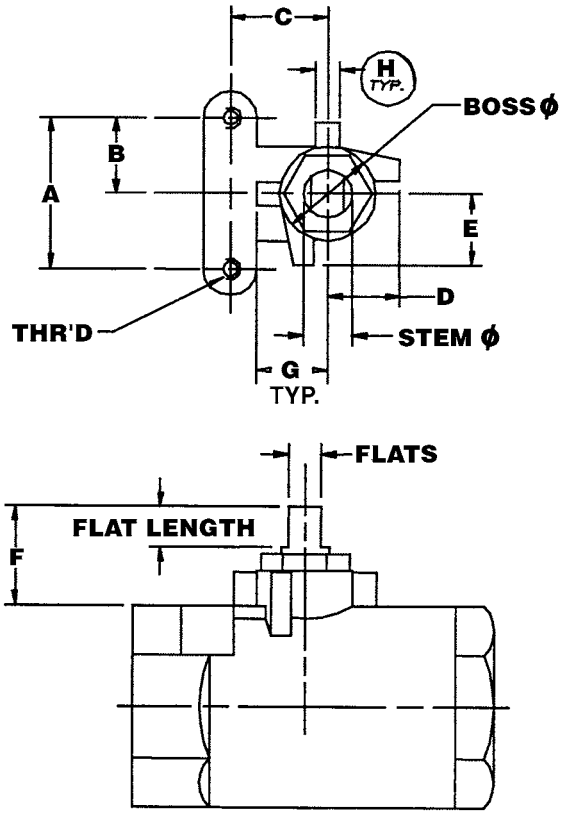

T-580-S6-R and TC-580-CS-R

Size		Dimensions A		B		C		D		E		F +.02		G +.02		H		Flats +0/-.012		Flat Length +0/-.012		Stem Ø +0/-.012		Boss Ø		Thr'd	Lb/In Torque 0 PSI
In.	mm.	In.	mm.	In.	mm.	In.	mm.	In.	mm.	In.	mm.	In.	mm.	In.	mm.	In.	mm.	In.	mm.	In.	mm.	In.	mm.	In.	mm.		
½	15	1.13	29	.56	14	.50	13	.55	14	.55	14	.94	24	.50	24	.25	6	.20	5	.39	10	.31	8	.71	18	10-24	69
¾	20	1.38	35	.69	17	.87	22	.67	17	.67	17	1.31	33	.67	17	.31	8	.28	7	.60	15	.44	11	.94	24	10-24	122
1	25	1.38	35	.69	17	.87	22	.67	17	.67	17	1.30	33	.67	17	.31	8	.28	7	.60	15	.44	11	.94	24	10-24	148
1¼	32	1.50	38	.75	19	.93	24	.79	20	.79	20	1.41	36	.79	20	.31	8	.35	9	.63	16	.56	14	1.10	28	25-20	252
1½	40	1.50	38	.75	19	.93	24	.79	20	.79	20	1.38	35	.79	20	.31	8	.35	9	.63	16	.56	14	1.10	28	25-20	304
2	50	1.50	38	.75	19	.93	24	.79	20	.79	20	1.41	36	.79	20	.31	8	.35	9	.63	16	.56	14	1.10	28	25-20	321

NIBCO INC. WORLD HEADQUARTERS • 1516 MIDDLEBURY ST. • ELKHART, IN 46516-4740 • USA • PH: 1.800.234.0227
TECH SERVICES PH: 1.888.446.4226 • FAX: 1.888.336.4226 • INTERNATIONAL OFFICE PH: +1.574.295.3327 • FAX: +1.574.295.3455
www.nibco.com

Three-Piece Bronze Ball Valves Data for Actuation

NIBCO® No. T/S-590 and TS-595 Series

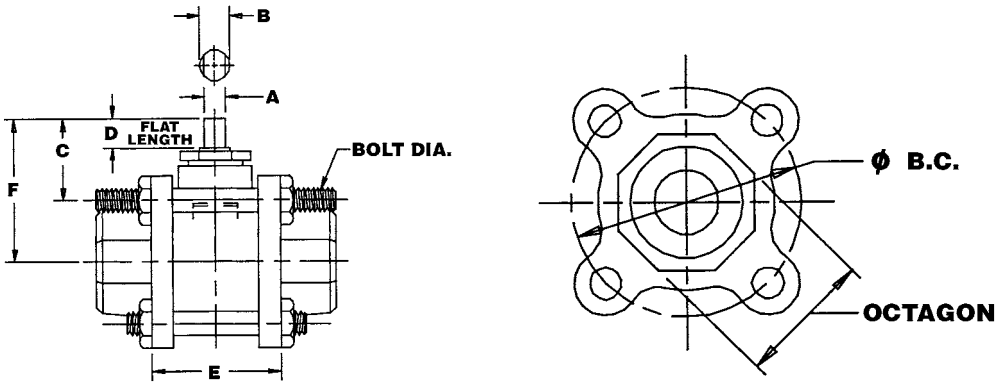

T/S-590 Series

Dimensions

Size		A +0 -.002		B		C ± 03		D		E + .03		F		Bolt Dia.	Octagon		Ø BC	
In.	mm.	In.	mm.	In.	mm.	In.	mm.	In.	mm.	In.	mm.	In.	mm.		In.	mm.	In.	mm.
1 ¼	32	.25	6	.38	10	1.09	28	.38	10	2.32	59	2.00	51	5/16-18	2.00	51	2.56	65
1 ½	38	.38	10	.56	14	1.59	40	.50	13	2.63	67	2.62	66	5/16-18	2.25	57	2.89	73
2	50	.38	10	.56	14	1.62	41	.50	13	3.12	79	2.81	71	5/16-18	2.75	70	3.37	86
2 ½	63	.38	10	.56	14	1.56	40	.56	14	3.88	99	3.12	79	3/8-16	3.50	89	4.39	112
3	76	.44	11	.75	19	2.09	53	.81	20	4.72	120	4.03	105	7/16-14	4.12	105	5.47	139

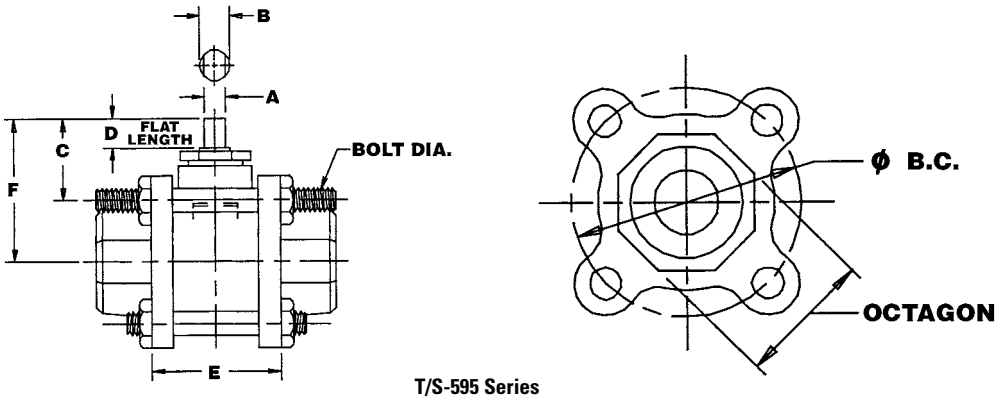

T/S-595 Series

Dimensions

Size		A +0 -.002		B		C ± 03		D		E + .03		F		Bolt Dia.	Octagon		Ø BC	
In.	mm.	In.	mm.	In.	mm.	In.	mm.	In.	mm.	In.	mm.	In.	mm.		In.	mm.	In.	mm.
½	13	.22	5	.31	8	.84	21	.30	8	1.38	35	1.47	37	1/4-20	1.06	24	1.79	45
¾	19	.25	6	.38	10	1.09	28	.38	10	1.87	47	1.81	46	1/4-20	1.25	32	2.05	52
1	25	.25	6	.38	10	1.09	28	.38	10	2.32	59	2.00	51	5/16-18	1.62	41	2.56	65
1¼	32	.38	10	.56	14	1.59	40	.50	13	2.62	67	2.62	66	5/16-18	2.00	51	2.89	73
1½	38	.38	10	.56	14	1.62	41	.50	13	3.12	79	2.81	71	5/16-18	2.25	70	3.37	86
2	50	.38	10	.56	14	1.56	40	.56	14	3.88	99	3.12	79	3/8-16	2.75	70	4.39	112
2½	63	.44	11	.75	19	2.09	53	.81	20	4.72	120	4.03	105	7/16-14	3.50	89	5.47	139

Three-Piece CS/SS Ball Valves Data for Actuation

NIBCO® No. TM/KM/BM-590 and TM/KM-595 Series

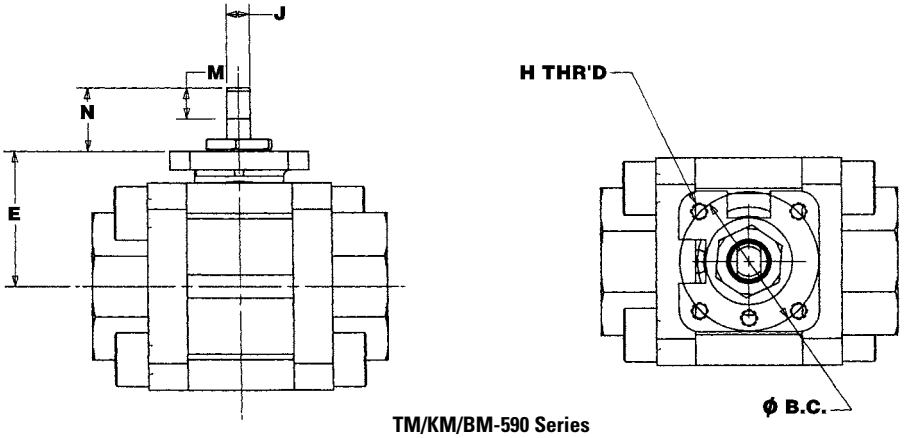

TM/KM/BM-590 Series

Dimensions

Size In.	Size mm.	J In.	J mm.	M In.	M mm.	N In.	N mm.	E In.	E mm.	H Thr'd	BC In.	BC mm.
½		.20	50	.41	10	.51	13	1.20	30	M5	1.42	36
¾		.20	5	.41	10	.51	13	1.36	35	M5	1.42	36
1		.28	7	.60	15	.75	19	1.59	40	M5	1.65	42
1 ¼	32	.32	8	.63	16	.87	22	1.81	46	M5	1.65	42
1 ½	40	.39	10	.69	18	.97	25	1.95	50	M6	1.96	50
2	50	.39	10	.69	18	.97	25	2.17	55	M6	1.97	50

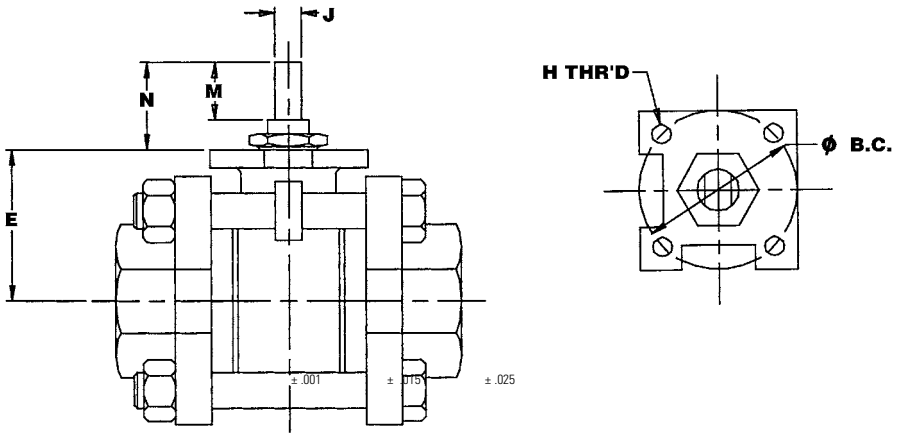

TM/KM-595 Series

Dimensions

Size In.	Size mm.	J In.	J mm.	M In.	M mm.	N In.	N mm.	E In.	E mm.	H Thr'd	BC In.	BC mm.
¼	8	.20	5	.41	10	.60	15	1.15	29	M5	1.42	36
⅜	10	.20	5	.41	10	.60	15	1.15	29	M5	1.42	36
½	15	.20	5	.41	10	.60	15	1.15	29	M5	1.42	36
¾	20	.28	7	.60	15	.85	22	1.34	34	M5	1.42	36
1	25	.28	7	.60	15	.91	23	1.58	40	M5	1.65	42
1 ¼	32	.352	9	.64	16	.87	22	1.82	46	M6	1.97	50
1 ½	40	.35	9	.64	16	.89	22	2.07	53	M6	1.97	50
2	50	.35	9	.64	16	.92	23	2.40	61	M6	1.97	50

NIBCO INC. WORLD HEADQUARTERS • 1516 MIDDLEBURY ST. • ELKHART, IN 46516-4740 • USA • PH: 1.800.234.0227
TECH SERVICES PH: 1.888.446.4226 • FAX: 1.888.336.4226 • INTERNATIONAL OFFICE PH: +1.574.295.3327 • FAX: +1.574.295.3455
www.nibco.com

Engineering Data Index

Specifications **104**

Temperature Limits of Material **105**

Flow Data **106-107**

Properties of Valve Materials **108-111**
Bronze, Brass, Copper and Iron 108-109
Steel, Stainless Steel and Alloys 110-111

Valve Installation Tips **112**

Figure Number Comparison **113**

Valve Warranty **114**

Specifications

NIBCO® ball valves are designed and manufactured to give maximum performance on recommended service at the lowest possible initial and upkeep cost. They meet or exceed the following specifications developed through years of experience, research and many laboratory tests.

Ball Valves

MSS SP-110	Ball valves threaded, socket-welding, solder joint, grooved and flared ends.
FED SPEC WW-V-35C, Type II, Cass C, D, Style 1 and 3	Ball valves threaded, socket-welding, solder joint, grooved and flared ends were discontinued in 1998. (for reference only)
MSS SP-25	Standard marking system for valves.
API 598	Valve inspection and testing.
API 607	Fire test for soft seated quarter-turn valves.
API 608	Metal ball valves – flanged, threaded and welding ends.
MSS SP-72	Ball valves with flanged and butt welding ends for general service.
ASME/ANSI B16.34	Valves, flanged, threaded and welding ends.
ASME/ANSI B16.5	Steel pipe flanges, flanged valves and fittings.

The above list of specifications covers a variety of NIBCO ball valves but does not mean that every NIBCO ball valve meets every specification.

For special applications, contact your NIBCO representative.

NIBCO INC. WORLD HEADQUARTERS • 1516 MIDDLEBURY ST. • ELKHART, IN 46516-4740 • USA • PH: 1.800.234.0227
TECH SERVICES PH: 1.888.446.4226 • FAX: 1.888.336.4226 • INTERNATIONAL OFFICE PH: +1.574.295.3327 • FAX: +1.574.295.3455
www.nibco.com

Temperature Limits of Materials

Rated Internal Working Pressures of Joints made with Copper Water Tube and Solder Type Fittings, PSI (Bar)

Solder or Brazing Alloy Used in Joints	Service Temperature ° F	(° C)	Copper Water Tube K, L and M Nominal Sizes, In Inches (mm) Water A ¼" to 1"	1¼" to 2"	2½" to 4"	5" to 8"	10" to 12"	Saturated Steam LB (kg) All Sizes
50- 50 Tin-Lead[B, G]	100	(38)	200 (14)	175 (12)	150 (10)	135 (9)	100 (7)	15[D] (6.8)[D]
	150	(66)	150 (19)	125 (8)	100 (7)	90 (6)	70 (4)	
	200	(93)	100 (9)	90 (6)	75 (5)	70 (40)	50 (3)	
	250	(121)	85 (6)	75 (5)	50 (3)	45 (3)	40 (2)	
95-5 Tin-Antimony[C]	100	(38)	635 (43)	560 (39)	375 (26)	340 (23)	150 (10)	15[D] (6.8)[D]
	150	(66)	635 (43)	560 (39)	375 (26)	340 (23)	150 (10)	
	200	(93)	630 (43)	480 (33)	375 (26)	340 (23)	140 (10)	
	250	(121)	435 (30)	330 (23)	265 (18)	245 (16)	110 (7)	
Brazing Alloys, Melting at or above 1000° F (538° C)	100-150-200	(32-66-93)	H	H	H	H	H	120[E] (54.4)[E]
	250[F]	(121)[F]	H	H	H	H	H	
	350	(177)	H	H	H	H	H	

The values in the above table are based on data in the National Bureau of Standards publications, "Building Materials and Structures Reports" BMS 58 and BMS 83.

[A] Including other non-corrosive liquids and gases.

[B] ASTM B 32, Alloy Grade Sn50.

[C] ASTM B 32, Alloy Grade Sb5.

[D] This pressure is determined by the temperature of saturated steam at 15 lb. (6.8 kg) pressure at 250° F (121° C).

[E] This pressure is determined by the temperature of saturated steam at 120 lb. (54.4 kg) pressure at 350° F (177° C).

[F] For service temperatures lower than 250° F (121° C), the solders as above may be used.

[G] The Safe Drinking Water Act Amendment of 1986 prohibits the use in potable water systems of any solder having a lead content in excess of 0.2%.

[H] Rated internal pressure is that of the tube being joined. While solders can be used, brazing alloys are recommended.

Pressure/Temperature Ratings for Bronze Pressure Rated Valves‡

Temperature		Pressure – PSI			
Press. Class		125[2,3]	150[3]	200[3]	300[3]
End Conn.		Thd.	Thd.	Thd.	Thd.
°F	°C	ASTM B 62		ASTM B 61	
-20 to 150	-28.8 to 65.5	200	300	400	600
200	93.3	185	270	375	560
250	121.1	170	240	350	525
300	148.8	155	210	325	490
350	176.6	140	180	300	450
400	204.4	–	–	275	410
406	207.7	125	150	–	–
450	232.2	120[1]	145[1]	250	375
500	260.0	–	–	225	340
550	287.7	–	–	200	300

[1] Some codes (i.e. ASME BPVC, SECTION 1) limit the rating temperatures of the indicated material to 406° F temperatures.

[2] Buna-N disc valves limited to 180° F temperatures.

[3] PTFE disc valves limited to 450° F temperatures.

[4] Solder end valves are limited by temperatures which affect the strength of the solder joint.

‡ Tables from MSS SP-80

Pressure/Temperature Ratings for NIBCO® Gray Iron and Ductile Iron Valves

[1]Temperature		Gray Iron Class 125 200 WOG			Gray Iron Class 250 500 WOG		Ductile Iron Class 150
°F	°C	2"-12"	14"-24"	30"-48"	2"-12"	14"-24"	2"-12"
-20 to 100	-28.8 to 37.7	200	150	150	500	300	285
150	65.5	200	150	–	500	300	243
200	93.3	190	135	115	460	280	235
225	107.2	180	130	100	440	270	–
250	121.1	175	125	85	415	260	225
275	135.0	170	120	65	395	250	–
300	148.8	165	110	50	375	240	215
325	162.7	155	105		355	230	–
350	176.6	150	100		335	220	210
375	190.5	145			315	210	–
400	204.4	140			290	200	200
425	218.3	130			270		–
*450	232.2	125			250		185
500	260.0						170
550	287.7						155
600	315.5						140
650	343.3						125

The temperature shown for the corresponding rating shall be the metal temperature of the pressure retaining parts. It shall be assumed that the metal temperature will be the temperature of the contained fluid. Use of a pressure rating at a metal temperature other than that of the contained fluid shall be the responsibility of the user.

[1] Buna-N Disc Valves limited to 180° F or EPDM Disc Valves limited to 250° F.

*Maximum temperature for bronze trim or PTFE

Flow Data
C_V Values for Valves

Liquid Flow:

$$Q = C_v \sqrt{\frac{\Delta P}{S}} \quad \text{or} \quad \Delta P = S\left(\frac{Q}{C_v}\right)^2$$

where… Q = flow rate (gallons per minute)
ΔP = pressure drop across valve (psi)
S = specific gravity of media

This equation is good for turbulent flow and for liquids with viscosities near that of water.
(Cv is defined as the flow in GPM that a valve will carry with a pressure drop of 1.0 psi when the media is water at 60°F.) (The specific gravity of water is 1 (one).)

VALVE SIZE

Size (mm.)	4	8	10	15	20	25	32	40	50	65	80	90	100	125	150
Size (In.)	**⅛**	**¼**	**⅜**	**½**	**¾**	**1**	**1¼**	**1½**	**2**	**2½**	**3**	**3½**	**4**	**5**	**6**
GATES															
S/T-29	.5	2	4.9	9.1	22	40	65	95	175						
S/T-111, 113, 131, 133 134, 136, 154, 174, 176	–	5.6	10.7	17.6	32	54	97	135	230	337	536	710	960	1,525	2,250
T/F-617, 619, 667, 669, 607, 609 F-637, 639									215	335	510	710	945	1,525	2,250
GLOBES															
S/T-211, 235, 256 275-Y	.61	1.16	2.2	3.64	6.65	11.1	20	28	48	70	111	–	198		
T-275-B	–	1.16	2.21	3.64	6.65	11.1	20	28	48	70	111				
F-718, F-738									45	70	105	–	195	315	465
CHECKS															
S/T-413, 433, 473 (Swing)	–	1.3	2.5	4.8	14.3	24	43	60	102	150	238	315	435	675	1,000
S/T-480 (Poppet)	–	–	3.70	6.86	16.3	30	49	72	130						
F-908 (Swing)										243	356	–	665	1,073	1,584
T/F-918, 968, 938 (Swing)									137	221	327	–	605	975	1,440
KW-900-W									60	105	184	–	354	577	801
F-910, 960 (Poppet)										110	155	–	278	431	625
W-910, 960 (Poppet)									66	88	130	–	228	350	520
G-920-W									77	129	209	–	358	573	898
W-920-W									71	108	178	–	330	560	840
BALL															
F-510, 530	–	–	–	11	25	45	–	137	217	–	482	–	790	–	1,144
F-515, 535	–	–	–	25	50	85	–	259	440	840	1,400	–	2,350	–	5,200
F-565	–	–	–	–	–	75	–	235	400	–	1,180	–	2,040	–	–
T-560-BR/CS/S6	–	4.0	4.0	5	12	22	35	52	95	–	–				
T-570	–	–	–	7	12	25	38	52	95	–	–				
T/S-580	–	–	–	5.8	13.9	27	44	64	100	–	–				
T/S-580-70	–	–	–	–	–	–	38.5	76	101.4	183	390				
T/S-585-70	–	4.2	6.2	15.3	30.4	48.8	103	143	245	–	–				
TM-585-70-66	–	–	–	15.3	30.4	48.8	103	143	245	–	–				
AT-585-70-66	–	–	–	–	–	–	–	–	–	183	–				
T-580-70-W3	–	–	–	–	–	–	21.6	38	48.5	–	–				
T/S-585-70-W3	–	–	–	6	12	19.5	–	–	–	–	–				
T-580 (CS-S6)	–	6	12	15	23	36	44	64	114	–	–				
T/S-590-Y	–	–	–	–	–	–	44	64	100	183	390				
T/S-595-Y	–	5.9	11.4	18.7	34	57	103	143	245	310	–				
TM/KM-595 (CS-S6)	–	6	12	19	37	64	103	143	245	–	–				
T/K-595 (CS-S6)	–	6	12	19	37	64	103	143	245	–	–				
BUTTERFLY															
LD/WD-1000, 2000, 3000									166	247	340	–	660	1,080	1,613
GD-4765, 4775 FC-2700, FD-5700									145	195	290	–	600	930	1,600

NOTE: Flow data for angle valves use globe Cv times 1.25:
Bronze Angles – 311, 335, 375, 376-AP
Iron Angles – 818, 869, 831

NIBCO INC. WORLD HEADQUARTERS • 1516 MIDDLEBURY ST. • ELKHART, IN 46516-4740 • USA • PH: 1.800.234.0227
TECH SERVICES PH: 1.888.446.4226 • FAX: 1.888.336.4226 • INTERNATIONAL OFFICE PH: +1.574.295.3327 • FAX: +1.574.295.3455
www.nibco.com

Gas Flow:

$$Q = 1360\ C_V \sqrt{\frac{\triangle P \times P_1}{ST}}$$

where . . . Q = gas flow (SCFH—std. cu. ft/hr)
S = specific gravity of gas (air = 1.0)
T = temp—degrees Rankine (°F + 460)
$\triangle P$ = pressure drop across valve (psi)
P_1 = upstream pressure (psia) absolute

NOTE: $\triangle P$ must be less than .5 P_1. (Flow is critical when $\triangle P$ is greater than .5 P_1.)

(THROTTLING FACTORS)

For throttling use with disc partially open. Multiply Cv by factor.
NOTE: Gate valves are not throttled.

200	250	300	350	400	450	500	600	750	900											
8	10	12	14	16	18	20	24	30	36	0	10	20	30	40	50	60	70	80	90	100
4,150	6,700	9,925	13,800	18,375	23,600	29,600	43,570													
										0	.35	.65	.90	.93	.96	.98	.99	1.00	1.00	1.00
										0	.03	.035	.06	.1	.16	.24	.32	.47	.68	1.00
860	1,390									0	.35	.65	.90	.93	.96	.98	.99	1.00	1.00	1.00
2,937	4,730	6,985																		
2,670	4,300	6,350																		
1,500	2,357	3,742																		
1,115	1,770	2,500	3,400	4,400	5,600	6,900	10,000	15,400	22,400											
900	1,450																			
1,740	3,180	5,270																		
1,600	2,700	4,000																		
										0	10	20	30	40	45	50	60	70	80	90
2,164	3,507	5,516								0	.01	.05	.16	.30	.37	.45	.58	.71	.87	1.00
10,200	14,400	25,300								0	.01	.05	.16	.30	.37	.45	.58	.71	.87	1.00
										0	.01	.05	.16	.30	.37	.45	.58	.71	.87	1.00
										0	.01	.05	.16	.30	.37	.45	.58	.71	.87	1.00
										0	.01	.05	.16	.30	.37	.45	.58	.71	.87	1.00
										0	.01	.05	.16	.30	.37	.45	.58	.71	.87	1.00
										0	.01	.05	.16	.30	.37	.45	.58	.71	.87	1.00
										0	.01	.05	.16	.30	.37	.45	.58	.71	.87	1.00
										0	.01	.05	.16	.30	.37	.45	.58	.71	.87	1.00
										0	.01	.05	.16	.30	.37	.45	.58	.71	.87	1.00
										0	.01	.05	.16	.30	.37	.45	.58	.71	.87	1.00
										0	.01	.05	.16	.30	.37	.45	.58	.71	.87	1.00
										0	.01	.05	.16	.30	.37	.45	.58	.71	.87	1.00
										0	.01	.05	.16	.30	.37	.45	.58	.71	.87	1.00
										0	.01	.05	.16	.30	.37	.45	.58	.71	.87	1.00
										0	.01	.05	.16	.30	.37	.45	.58	.71	.87	1.00
										0	.01	.05	.16	.30	.37	.45	.58	.71	.87	1.00
3,759	5,300	7,969	11,917	16,383	21,705	27,908	43,116	60,922	86,375	0	.03	.06	.12	.18	.22	.27	.40	.56	.80	1.00
3,450	5,800	8,950																		

WARNING

The Fluid Flow factors contained herein are calculated values. They are, therefore, approximations and cannot be used for highly critical flow or pressure drop calculations. For very precise flow measurements, tests must be conducted on any valve mentioned within this catalog. Throttling of ball valves is not recommended when valves are less than 45° open.

Properties of Valve Materials

Type	ALLOY	ASTM NO.	OTHER ALLOY DESIGNATION	NOMINAL OR MAXIMUM CHEMICAL COMPOSITION								
				AL	CARBON C	CHROME Cr	COBALT Co	COPPER Cu	IRON Fe	LEAD Pb	MANGA-NESE Mn	MOLYB-DENUM Mo
Brass	Brass Wire (Red Brass)	B 134	UNS C23000					85.0	.05	.05		
	Leaded Red Brass	B 140	UNS C31400					89.0	.10	1.9		
	Free Cutting Brass	B 16	UNS C36000					61.5		3.0		
	Forging Brass	B 124	UNS C37700					60.0	.3	2.0		
	Forging Brass	B 283	UNS C37700					58.0	.3	2.5		
	Leaded Brass (Semi-Red Brass)	B 584	UNS C84400	.005				81.0	.40	7.0		
	Leaded Brass (Red Brass)	B 584	UNS C84500	.005				78.0	.40	7.0		
Bronze	Aluminum Bronze (Rod)	B 150	UNS C64200	7.0				91.0	.30	.05	.10	
	Copper-Silicon Alloy (Alloy B)	B 98/B 99	UNS C65100					96.0	.8	.05	.7	
	Copper-Silicon Alloy (Rod Lead-Free - DZR)		UNS C69300					75.0				
	Copper-Silicon Alloy	B 371	UNS C69400					81.5	.20	.30		
	Composition Bronze (Ounce Metal)	B 62	UNS C83600	.005				85.0	.30	5.0		
	Copper-Silicon Alloy	B 584	UNS 87600					89.0				
	Copper-Silicon Alloy (Cast Lead-Free - DZR)	B 584	UNS 87850					76.0				
	Navy "M" (Steam Bronze)	B 61	UNS C92200	.005				88.0	.25	1.5		
	Aluminum Bronze (Cast)	B 148	UNS C95400	11.0				85.0	4.0			
	Nickel Bronze (Leaded)	B 584	UNS C97600					64.0		4.0		
Copper	Copper (Wrot)	B 75	UNS C12200					99.9				
Iron	Gray Iron	A 126	Class B									
	3% Ni Gray Iron (Modified)	A 126	Class B									
	Austenitic Gray Iron (Ni-Resist)	A 436	Type 2		3.00	2.0		.5			1.0	
	Ductile Iron (DI) (Ferritic)	A 395			3.20	2.0		.5				
	Austenitic Ductile Iron											
	(Ductile)	A 536	65-45-12									
	(Ductile)	A 536	80-55-06									
	(Ni-Resist)	A 439	D2C			2.9	.5				2.4	1.0
Alum.	Commercial Aluminum 380	SC 84 A modified	UNS A38000	87.0				1.0	1.3		.35	

NIBCO INC. WORLD HEADQUARTERS • 1516 MIDDLEBURY ST. • ELKHART, IN 46516-4740 • USA • PH: 1.800.234.0227
TECH SERVICES PH: 1.888.446.4226 • FAX: 1.888.234.0557 • INTERNATIONAL OFFICE PH: +1.574.295.3327 • FAX: +1.574.295.3455
www.nibco.com

NOMINAL OR MAXIMUM CHEMICAL COMPOSITION								NOMINAL PHYSICAL PROPERTIES			
NICKEL Ni	PHOS P	SILICON Si	SULFUR S	TIN Sn	TITAN-IUM Ti	TUNG-STEN W	ZINC Zn	TENSILE STRENGTH Psi	YIELD STRENGTH Psi	% ELONGATION	HARDNESS
							15.0	56,000			60 HRB
.7							9.1	50,000	30,000	7	60 HRB
							35.5	50,000	20,000	15	75 HRB
							38.0	52,000	20,000	45	80 HRB
							38.0	52,000	20,000	45	78 HRB
	.02	.005	.08	3.0			9.0	29,000	13,000	18	55 HB
1.0	.02	.005	.08	3.0			12.0	29,000	13,000	16	55 HRB * 500 kg
.25		2.0		.20			.50	90,000	45,000	9	80 HRB
		1.6					1.5	86,000**	20,000	11	65 HRB
	.10	3.0					21.9	80,000	48,000	5	80 HRB
		4.0					14.5	80,000	40,000	15	80 HRB
1.0	.05	.005	.08	5.0			5.0	30,000	14,000	20	60 HB * 500 kg
		4.5					5.5	66,000	32,000	20	110 HB
	.12	3.0					20.9	68,000	22,000	16	70 HRB
1.0	.05	.005	.05	6.0			4.5	34,000	16,000	22	65 HRB * 500 kg
								75,000	30,000	12	170 HB * 3000 kg
20.0				4.0			8.0	40,000	17,000	10	80 HB
	.02							36,000	30,000	25	45 T
	.75		.15					31,000			195 HB
3.00	.75		.15					31,000			195 HB
20.0		2.0	.12					25,000			118 HB
	.08	2.50						60,000	40,000	18	167 HB
								65,000	45,000	12	160 HB
								80,000	55,000	6	160 HB
24.0	.08	3.0						58,000	28,000	20	146 HB
.5		12.0		.15			.50	42,000	19,000	3.5	

**Load Applied During Testing*
***Allowable Range is 75,000 to 95,000*

Properties of Valve Materials

	ALLOY	ASTM NO.	OTHER ALLOY DESIGNATION	NOMINAL OR MAXIMUM CHEMICAL COMPOSITION AL	CARBON C	CHROME Cr	COBALT Co	COPPER Cu	IRON Fe	LEAD Pb	MANGA-NESE Mn	MOLYB-DENUM Mo
Stainless Steel	Wrot 304	A 167 304	UNS S30400		.08	19					2	
	Cast 316	A 351 CF8M	UNS S31600		.08	20					1.5	2.5
	Cast 316	A 743 CF16F			.16	20					1.5	1.5
	Cast 316	A 743 CF8M			.08	20					1.5	2.5
	Wrot 316	A 276 316	UNS S31600		.08	17					2	
	Cast 410	A 217 CA 15			.15	13					1	2.5
	Forged 410	A 182 F6A2			.15	13					1	
	Wrot 410	A 276 410	UNS S41000		.15	13					1	
	Wrot 416	A 582	UNS S41600		.15	13					1.25	
	Wrot 420	A 276 420	UNS S42000		.15	13					1	
	Cast Alloy 20	A 743 CN7M			.07	20		3.5			1.5	2.5
	Wrot Alloy 20	B 473 20C63	UNS N08020		.07	20		3.5			2	2.5
	Wrot 17-4PH	A 564 630	UNS S17400		.07	16		3.5			1	
Steels	Forged Carbon Steel	A 105			.35						1	
	Cast Carbon Steel	A 216 WCB			.3						1.1	
	Cast Carbon Steel	A 216 WCC			.25						1.2	
	1¼ Cast Cr. Moly Steel	A 217 WC6			.2	1.2					.7	.55
	Cast Cr. Moly Steel	A 217 C5			.2	5					.55	.55
	Cast Low Carbon Steel	A 352 LCB			.3						1.0	
	Nickel-Low Carbon Steel	A 352 LC2			.25						.65	
Trim Steels	B-7 Alloy Steel Studs	A 193 B7			.4	1					.85	.2
	304 SS Nuts	A 194 GR8			.08	19					2	
	2-H Alloy Steel Nuts	A 194 2H			.4							
	Reg. Steel Bolting	A 307 Gr. B			.2						.45	
	Steel Bolting	A 449			.4						.6	
	304SS Bolting	A 493 304	UNS S30400		.08	19					2	
	Eyebolts	A 489			.48						1.0	
	Gland Nuts	A 563 Gr. A			.37	.55		.35			1.0	
	H/W Nuts	A 108 1020	UNS G10200		.20						.45	
	Swing Bolt Pin	A 108 1212	UNS G12120		.13						.85	
	Yoke Bushing Caps	A108 12L14			.15					.25	1.0	
	Seat Ring Base	A 519 1026			.25						.75	
Monel H.F.	(Trademark Materials like, Stellite 6*, Stoody 6, and Wallex 6)		AWS 5.13		1.25	29	55		2.5			
	Cast Monel		QQ-N-288-E	.5	.3			30	3.5		1.5	
	Wrought Monel (K-500)		QQ-N-286-C1B	3.0	.1			24	2.0		1.5	

***Trademark by Cabot Corp.**

NIBCO INC. WORLD HEADQUARTERS • 1516 MIDDLEBURY ST. • ELKHART, IN 46516-4740 • USA • PH: 1.800.234.0227
TECH SERVICES PH: 1.888.446.4226 • FAX: 1.888.234.0557 • INTERNATIONAL OFFICE PH: +1.574.295.3327 • FAX: +1.574.295.3455
www.nibco.com

NOMINAL OR MAXIMUM CHEMICAL COMPOSITION								NOMINAL PHYSICAL PROPERTIES			
NICKEL Ni	PHOS P	SILICON Si	SULFUR S	TIN Sn	TITAN-IUM Ti	TUNG-STEN W	ZINC Zn	TENSILE STRENGTH Psi	YIELD STRENGTH Psi	% ELONGATION	HARDNESS
9	.045	1.0	.03					75,000	30,000	40	202 HB
11	.04	2.0	.04					70,000	30,000	25	
11	.04	2.0	.04					70,000	30,000	30	
12	.045	1.0	.03					75,000	30,000	30	
12	.045	1.0	.03					75,000	30,000	30	
1	.04	1.5	.04					90,000	65,000	18	
	.04	1.0	.03					85,000	55,000	18	200/225 HB
.5	.04	1.0	.03					100,000	80,000	15	
	.06	1.0	.15					114,000	95,000	17	235 HB
	.04	1.0	.03								250/450 HB
28	.04	1.5	.04					62,000	25,000	35	
35	.045	1.0	.035					85,000	35,000	30	
4	.04	1.0	.03					115,000	75,000	18	255 HB
	.04	.035	.05					70,000	36,000	22	187 HB
	.04	.6	.045					70,000	36,000	22	
	.04	.6	.04					70,000	40,000	22	
	.04	.06	.045								
	.04	.75	.045								
	.04	.6	.045					65,000	35,000	24	
2.5	.04	.6	.045					70,000	40,000	24	
	.035	.25	.04					125,000	105,000	16	
9	.045	1.0	.03								126/300 HB
	.04		.05								250/300 HB
	.04		.05					100,000		18	121/212 HB
	.04		.05					120,000	92,000	14	
9	.045	1.0	.03					90,000			
	.04	.25	.05					75,000	30,000	30	
.35	.04	.2	.05								
	.04		.05								120/300 HB
	.10		.20								
	.07		.3								
	.04		.05					55,000	35,000	25	
3						5		105,000		10	350 HB
60		1.5						65,000	32,500	25	125/150 HB
67		.5	.01		.5			135,000	95,000	20	255 HB

Valve Installation Tips

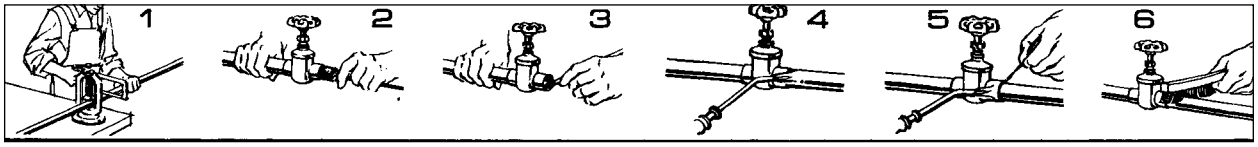

SOLDERING AND SILVER BRAZING

Analyze the application to determine which valve is best suited for installations, keeping in mind the service for which the valve is recommended. Before installing the correct valve, review the installation instructions to prevent damage to the valve and to assure its maximum efficiency.

1. Cut tube end square. Ream, burr and size.
2. Use sand cloth or steel wire brush to clean both ends to a bright metal finish. Steel wool is *not* recommended.
3. Apply flux to outside of tube and inside of solder cup. Surfaces to be joined must be completely covered. Use flux sparingly.
4. Be sure that valve is fully open. Apply heat to tube first. Transfer as much heat as possible through tube into valve. Avoid prolonged heating of valve itself.

4a. Silver Brazing Method: Assemble parts to be brazed. If fluxed parts are allowed to stand, the water in the flux will evaporate, and dried flux is liable to flake off, exposing metal surfaces to oxidation. Assemble joint by inserting tube into socket hard against the stop. The assembly should be firmly supported so that it will remain in alignment during the brazing operation.

NOTE: On one-inch and larger valves, it is difficult to bring the whole joint up to temperature at one time. It will frequently be found desirable to use a double-tip torch to maintain the proper temperature over the larger area. A mild pre-heating of the whole socket area is recommended. Apply heat to parts to be joined. The preferred method is by oxy-acetylene flame. Heat tube first, beginning one inch from edge of valve. Sweep flame around tube in short strokes up and down at right angles to run of tube. To avoid burning through tube, the flame should be in continuous motion and not allowed to remain on any one point.

Apply flame to valve at base of socket. Heat uniformly, sweeping flame from valve to tube until flux on valve becomes quiet. Avoid excessive heating of valve.

When flux appears liquid and transparent on both tube and valve, start sweeping flame back and forth along axis of joint to maintain heat on parts to be joined, especially toward base of valve socket.

5. Use just enough solder: with wire solder, use 3/4" for a 3/4" valve, etc. If too much solder is used, it may flow past tube stop and clog sealing area. When joint is filled, a continuous run of solder or brazing alloy will be visible.

5a. Silver Brazing Method: Apply brazing wire or rod at point where tube enters valve socket. Keep flame away from rod or wire as it is fed into the joint. Move flame back and forth as alloy is drawn into joint. When the proper temperature is reached alloy will flow readily into space between tube outer wall and valve socket. When joint is filled, a continuous rim of brazing alloy will be visible.

6. Remove excess solder with small brush while plastic, leaving a fillet around end of valve as it cools.

SILVER BRAZING

The strength of a brazed joint does not vary appreciably with the different brazing materials, but depends to a large extent upon the maintenance of proper clearance between the outside of the tube and the valve socket. The interior dimensions of silver brazing valve sockets are machined to the closest tolerances and finished smooth to promote full capillary attraction.

NOTE: Care should be observed in cleaning and in removing residues of the cleaning medium. Attempting to braze a contaminated or improperly cleaned surface will result in an unsatisfactory joint. Silver brazing alloys will not flow over or bond to oxides. Oily or greasy surfaces repel fluxes, leaving bare spots which oxidize and result in voids and inclusions.

THREADING

Grit, dirt or any foreign matter accumulated in the pipe can hinder efficient valve operation and seriously damage vital valve parts. Thoroughly clean pipe internally with air or steam.

When threading pipe, gauge pipe threads for size and length to avoid jamming pipe against seat and disc. Thoroughly clean threaded end to remove any harmful steel or iron deposits. For a good joint, use PTFE tape or pipe dope. If pipe dope is used, apply sparingly on pipe threads, *never* on valve threads. Do not allow any pipe dope into valve body in order to avoid damage to disc and seat.

Before installation, check line of flow through valve so that valve will function properly. Close valve completely before installation. Apply wrench to hex next to pipe and guard against possible distortion. After installation of valve, support line; a sagging pipe line can distort valve and cause failure.

FLANGED

There are several steps to follow to make sure that a flanged joint will be properly assembled. First, clean the joint carefully. Then loosely assemble the joint by putting in the bottom two or three bolts. Then carefully insert the gasket into place. The bottom bolts will help locate the gasket and hold it in position. Then insert the rest of the bolts into place and tighten all of the bolts evenly—not in rotation, but by the cross-over method to load the bolts evenly and eliminate concentrated stresses. The bolts should be checked for tightness after an appropriate interval of use and retightened if necessary.

NIBCO INC. WORLD HEADQUARTERS • 1516 MIDDLEBURY ST. • ELKHART, IN 46516-4740 • USA • PH: 1.800.234.0227
TECH SERVICES PH: 1.888.446.4226 • FAX: 1.888.336.4226 • INTERNATIONAL OFFICE PH: +1.574.295.3327 • FAX: +1.574.295.3455
www.nibco.com

Figure Number Comparisons

Threaded/Solder/Weld End Ball Valves

	NIBCO	Milwaukee	Apollo (Conbraco)	Watts	Jamesbury	Worcester
One-Pc. Bronze	560-BR	—	9A-100	B6100	—	—
Two-Pc. Bronze Conventional Port	580-70	BA100/150	70-100/200	B6000/6001	A11-TT	4811R
Two-Pc. Bronze Full Port	585-70	—	77-100/200	B6080/6081	—	—
Two-Pc. Brass Full Port	FP-600	BA475/485	64-100	FBV(S)-3	—	
Three-Pc. Bronze Conventional Port	590-Y	—	—	—	—	411T
Three-Pc. Bronze Full Port	595-Y	BA300/350	82-100/200	B6800/6801	—	5911T
One-Pc. Carbon Steel Cast	560-CS	—	92-100	C-7100	33-2200-ML	—
One-Pc. Carbon Steel Bar Stock	570-CS	—	93-100	—	—	5844R
Two-Pc. Carbon Steel	580-CS	20 CS OR	73-100	C-7000	A22MT	4844R
Three-Pc. Carbon Steel ISO Mtg Conventional Port	TM/KM/BM 590-CS	—	83-300/400	C-7450	4A-2200-MT	444T
Three-Pc. Carbon Steel Full Port	595-CS	BA370	83-500/600	C-7480	4B-2200-MT	5944R
Three-Pc. Carbon Steel ISO Mtg	TM/KM			C-7480 02 Y90	4B-2236-MT	
Full Port	595-CS	—	83R-100/200	C-7481 02 Y90	4D-2236-MT	—
One-Pc. Stainless Steel Cast	560-S6	—	96-100	S-8100	33-3600-ML	—
Two-Pc. Stainless Steel	580-S6	20 SS OR	76-100	S-8000	A36-MT	4866R
Three-Pc. Stainless Steel Conventional Port	590-S6	—	85-100/200	S-8450	4A-3600-MT	466T
Three-Pc. Stainless Steel Full Port	595-S6	BA360	86-100/200	S-8480	4A-3600-MT	5966R
Three-Pc. Stainless Steel ISO Mtg	TM/KM			S-8480 02 Y90	4B-3636-MT	
Full Port	595-S6	—	—	S-8481 02 Y90	4D-3636-MT	—

Flanged Ball Valves

Uni-Body Flanged Ball Valves

	NIBCO	Apollo	Jamesbury	Kitz	Velan	Watts	Worcester
Class 150 Carbon x Stainless	F-510-CS-R-66/FS	88-140	5150-31-2236MT	K150-SCTAM	—	CF-1500-150-02-T316	5146RT150
Class 300 Carbon x Stainless	F-530-CS-R-66/FS	88-740	5300-31-2236MT	K300-SCTAM	—	CF-1500-300-02-T316	5246RT300
Class 150 Stainless x Stainless	F-510-S6-R-66/FS	87-100	5150-31-3600MT	K150-UTAM	—	SF-2500-150-02	5166RT150
Class 300 Stainless x Stainless	F-530-S6-R-66/FS	87-700	5300-31-3600MT	K300-UTAM	—	SF-2500-150-02	5266RT300

Split-Body Full Port Flanged Ball Valves

Description	NIBCO	Apollo	Jamesbury	Kitz	Velan	Watts
Class 150 Carbon x Stainless	F-515-CS-F-66/FS	88-240	6150-31-2236MT	K-150-SCTBM	F-01402-SSGA	CF-1500-150-02
Class 300 Carbon x Stainless	F-535-CS-F-66/FS	—	6300-31-2236MT-1	K300-SCTBM	F-11402-SSGA	CF-1500-150-02-T316
Class 150 Stainless x Stainless	F-515-S6-F-66/FS	87-200	6150-31-3600MT	K150-UTBM	F-01413-SSGA	SF-2500-150-02
Class 300 Stainless x Stainless	F-535-S6-F-66/FS	—	6300-31-3600MT	K300-UTBM	F-11413-SSGA	SF-2500-150-02

To be used as a guide only. Some variations in detail are possible.

5 year 125% warranty

NIBCO INC. 125% LIMITED WARRANTY

Applicable to NIBCO INC. Pressure Rated Metal Valves

NIBCO INC. warrants each NIBCO® pressure rated metal valve to be free from defects in materials and workmanship under normal use and service for a period of five (5) years from date put into service.

In the event any defect occurs which the owner believes is covered by this warranty, the owner should immediately contact NIBCO Technical Services, either in writing or by telephone at (888) 446-4226 or (574) 295-3000. The owner will be instructed to return said product, at the owner's expense, to NIBCO INC., or an authorized representative for inspection. In the event said inspection discloses to the satisfaction of NIBCO INC. that said valve is defective, it will be replaced at the expense of NIBCO INC.. Replacements shall be shipped free of charge to the owner. In the event of the replacement of any valve, NIBCO INC. shall further pay the owner the greater of Twenty-Five (25%) Percent of the price of the valve according to the published suggested list price schedule of NIBCO INC. in effect at the time of purchase, or Ten ($10.00) Dollars, to apply on the cost of the installation of said replacement valve.

TO THE EXTENT PERMITTED BY LAW, THIS WARRANTY SPECIFICALLY EXCLUDES INCIDENTAL AND CONSEQUENTIAL DAMAGES OF EVERY TYPE AND DESCRIPTION RESULTING FROM ANY CLAIMED DEFECT IN MATERIAL OR WORKMANSHIP, INCLUDING BUT NOT LIMITED TO, PERSONAL INJURIES AND PROPERTY DAMAGES. Some states or countries do not allow the exclusion or limitation of incidental or consequential damages so these limitations may not apply to you. TO THE EXTENT PERMITTED BY LAW, IMPLIED WARRANTIES OF MERCHANTABILITY AND FITNESS FOR A PARTICULAR PURPOSE ARE LIMITED IN DURATION.

This warranty gives you specific legal rights, and you may also have other rights which vary from state to state and country to country.

how to order

State quantity, figure number and size for each valve you wish to order. See individual valve catalog pages for specific or special product designations.

HOW MANY TO ORDER

NIBCO® valves are decimal packed for your convenience in handling, shipping and stock-keeping. Number in master carton varies with item.

POLICY ON RETURNS TO FACTORY

NO NIBCO valves are to be returned without prior written agreement. Transportation must be prepaid. A 20% charge will be made to cover cost of rehandling and reinspection.

TECHNICAL ASSISTANCE

Engineers, contractors, wholesalers or manufacturers may obtain special or technical assistance from any factory representative of NIBCO. Write, fax or phone.

NIBCO INC.
World Headquarters
1516 Middlebury Street
Elkhart, IN 46516-4740
USA

Phone: 1.574.295.3000
Fax: 1.574.295.3307
Technical Service Phone: 1.888.446.4226
Fax: 1.888.336.4226

To the best of our knowledge, the information contained in this publication is accurate. However, NIBCO® does not assume any liability whatsoever for the accuracy or completeness of such information. Final determinations of the suitability of any information or product for the use to be contemplated is the sole responsibility of the user. The manner of that use, and whether there is any infringement of patents, is also the sole responsibility of the user.

globally connecting you at all levels

It's a new age of business, and a new way at NIBCO. From Elkhart, Indiana to Lodz, Poland, and points beyond, our company has integrated manufacturing, distribution, and networked communications to provide a seamless source of information and service, 24 hours a day, 7 days a week. But this integration hasn't happened overnight. It's been part of a long-term strategic process that has pushed us to reconsider every aspect of our business. The result? We're a vertically integrated manufacturer with the products and systems in place to deliver low cost and high quality. NIBCO® products are manufactured under a Quality Management System conforming to the current revision of ISO-9001 International Standards. We know the flow control industry is only going to get more demanding, and we are more than ready. We will continue to lead. That's what NIBCO is all about.

NIBCO INC. WORLD HEADQUARTERS • 1516 MIDDLEBURY ST. • ELKHART, IN 46516-4740 • USA • PH: 1.800.234.0227
TECH SERVICES PH:1.888.446.4226 • FAX: 1.888.336.4226 • INTERNATIONAL OFFICE PH: +1.574.295.3327 • FAX: +1.574.295.3455
www.nibco.com

FEATURING NIBCO® SYSTEMS

NIBCO® PEX Piping Systems • NIBCO® Press System®

C-BV-0812

FITTINGS

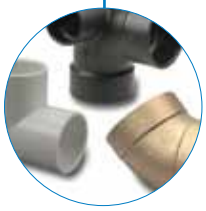

Wrot and cast copper pressure and drainage fittings • Cast copper alloy flanges • Wrot and cast press fittings • ABS and PVC DWV fittings • Schedule 40 PVC pressure fittings • CPVC CTS fittings • CPVC CTS-to-metal transition fittings • Schedule 80 PVC and CPVC systems • CPVC metric piping systems • CPVC BlazeMaster® fire protection fittings • Lead-Free* fittings

BlazeMaster® is a registered trademark of The Lubrizol Corporation.
*Weighted average lead content ≤0.25%

VALVES & ACTUATION

Pressure-rated bronze, iron and alloy-iron gate, globe and check valves • Pressure-rated bronze ball valves • Boiler specialty valves • Commercial and industrial butterfly valves • Circuit balancing valves • Carbon and stainless steel ball valves • ANSI flanged steel ball valves • Pneumatic and electric actuators and controls • Grooved ball and butterfly valves • High performance butterfly valves • UL/FM fire protection valves • MSS specification valves • Bronze specialty valves • Low pressure gate, globe, check and ball valves • Frostproof sillcocks • Quarter–turn supply stops • Quarter-turn low pressure valves • PVC ball valves • CPVC CTS ball valves • Just Right® recirculating valves • Bronze & Iron Y-Strainers • Lead-Free* valves

*Weighted average lead content ≤0.25%

CHEMTROL®

Thermoplastic pipe, valves and fittings in PVC, Corzan® CPVC, polypropylene and PVDF Kynar® • Pneumatic and electric actuation systems

Corzan® is a registered trademark of The Lubrizol Corporation. • Kynar® is a registered trademark of Arkema Inc.

eNIBCO

EDI—Electronic Data Interchange • VMI—Vendor Managed Inventory • NIBCO.com • NIBCOpartner.com

NIBCO®
AHEAD OF THE FLOW®

NIBCO INC.
WORLD HEADQUARTERS
WEB: www.nibco.com

1516 MIDDLEBURY STREET
ELKHART, IN 46516-4740
USA

DOMESTIC CUSTOMER SERVICE
PHONE: 800.234.0227
FAX: 800.234.0557

TECHNICAL SERVICE
PHONE: 888.446.4226
FAX: 888.336.4226

INTERNATIONAL OFFICE
PHONE: +1/574.295.3327
FAX: +1/574.295.3455

C-BV-0812 © 2012 NIBCO INC., All Rights Reserved.

Printed in U.S.A.