NIBCO®

AHEAD OF THE FLOW®

Fixed Orifice Double Regulating Valve

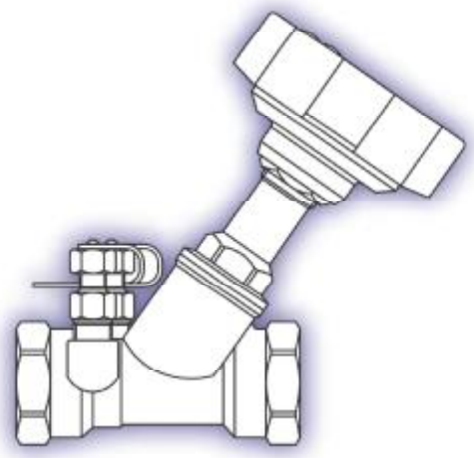

Flow Data and Installation Instructions

NIBCO
AHEAD OF THE FLOW®

Technical Data

The Chienhsin FODRV is a fixed orifice double regulating valve used to regulate and measure the flow passing through it.

Flow Coefficient

The flow rate can be calculated using the K_{vs} value and a measured signal.

$$K_v = \frac{Q*36}{\sqrt{\Delta P}} \qquad K_{vs} = \frac{Q*36}{\sqrt{\Delta Ps}}$$

where K_v & K_{vs} = flow coefficient (m^3/hr at 1 bar differential)
Q = flow rate (l/s)
ΔP = headloss attributable to valve (kPa)
ΔPs = differential pressure across tappings (signal) (kPa)

K_{vs} Values

Size	½″	¾″	1″	1¼″	1½″	2″
K_{vs}	1.99	4.27	7.28	15.13	21.73	38.76

Pressure Loss

The pressure loss across the fixed orifice double regulating valve is the combined loss attributable to the orifice plate and double regulating valve in the fully open position.

K_v Values

Valve Size	½″	¾″	1″	1¼″	1½″	2″
Position	Kv					
1	0.39	0.44				
1.5	0.48	0.52	0.90	1.23	1.29	1.33
2	0.62	0.73	1.22	1.37	1.61	1.80
2.5	0.79	1.52				
3	1.21	2.24	1.74	2.91	3.16	3.94
3.5	1.49	2.69				
4	1.62	3.04	2.19	7.16	7.86	9.41
5			3.28	9.18	11.95	15.82
6			4.58	10.02	16.01	20.25
7					20.21	23.61
7.5					23.26	25.67

Technical Data

Installation

Fixed orifice double regulating valves must always be installed with a minimum of 5 pipe diameters of straight pipe, without intrusion, upstream of the orifice plate.

Downstream of the valve a minimum of 2 pipe diameters of straight pipe are required.

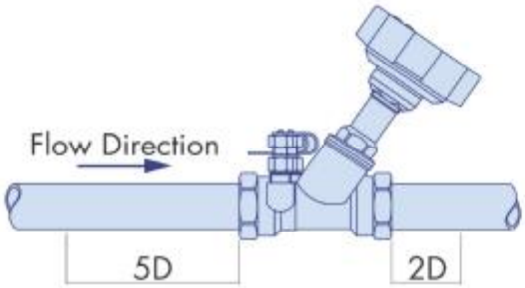

Sizing

Once the required flow rate has been calculated, the size of the fixed orifice double regulating valve can be determined based on the following:

The minimum signal at the design flow rate of 1 kPa.

For minimum pressure loss, a maximum signal of 4.7 kPa, which corresponds to the maximum differential pressure range of a fluorocarbon manometer.

Pressure Equipment Directive

Under the European Pressure Equipment Directive (PED) these fixed orifice double regulating valves have been specified for Group 2 Liquids i.e. non-hazardous

Sizes ½″ to 2″ are classified as SEP (Sound Engineering Practice)

NIBCO
AHEAD OF THE FLOW®

½" Fixed Orifice Double Regulating Valve

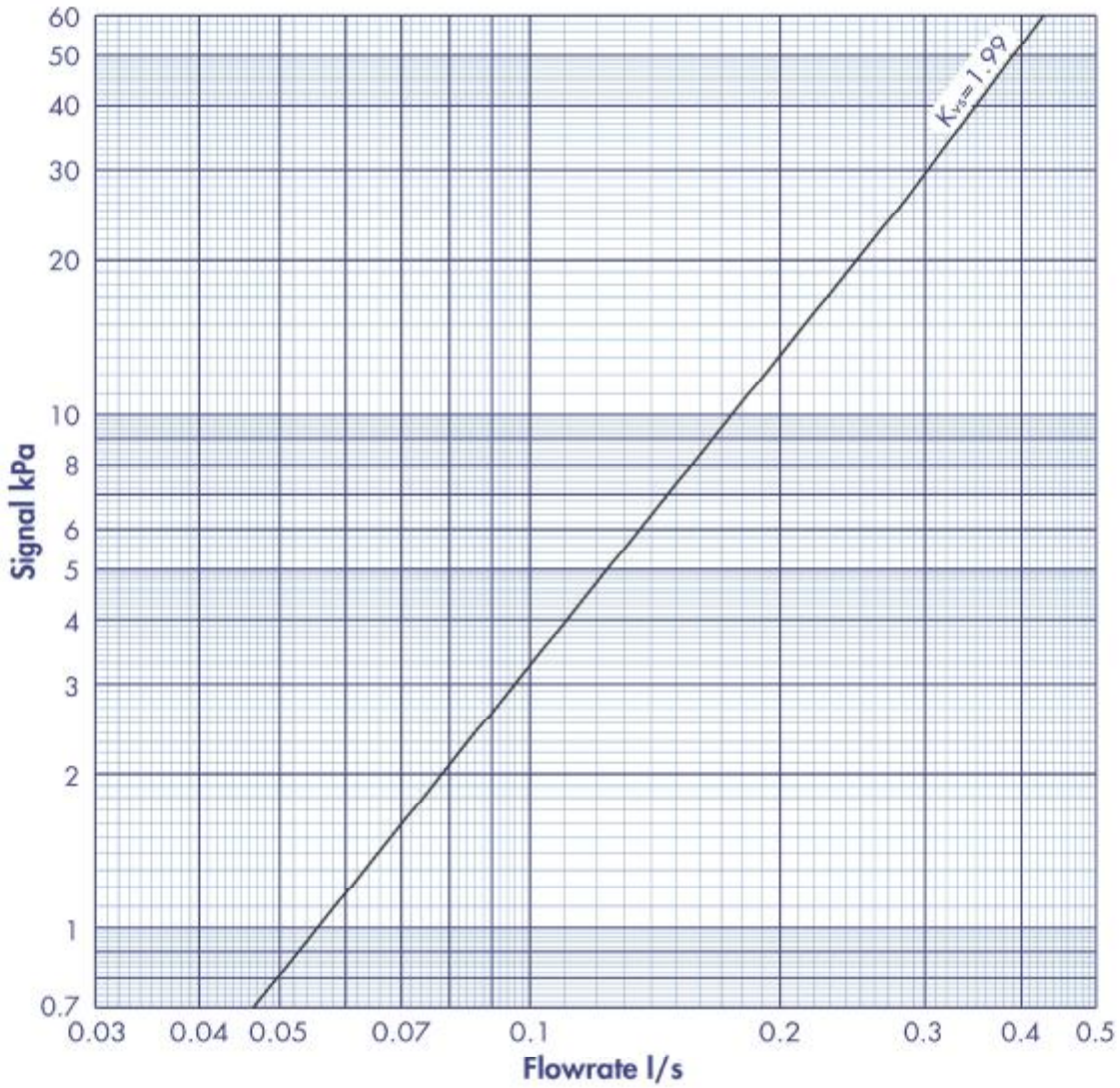

Signal / Flowrate

Chart used to determine flowrate from signal measured across orifice

$$Q = \frac{K_{vs}\sqrt{\Delta p}}{36}$$

Where

Q	= Flowrate	l/s
Δp	= Signal	kPa
K_{vs}	= Signal Co-efficient	

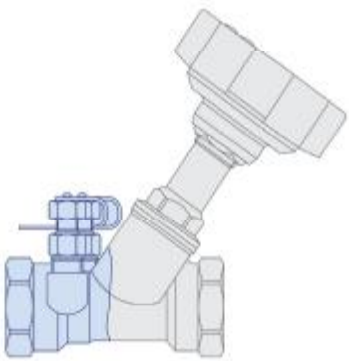

NIBCO
AHEAD OF THE FLOW®

½" Fixed Orifice Double Regulating Valve

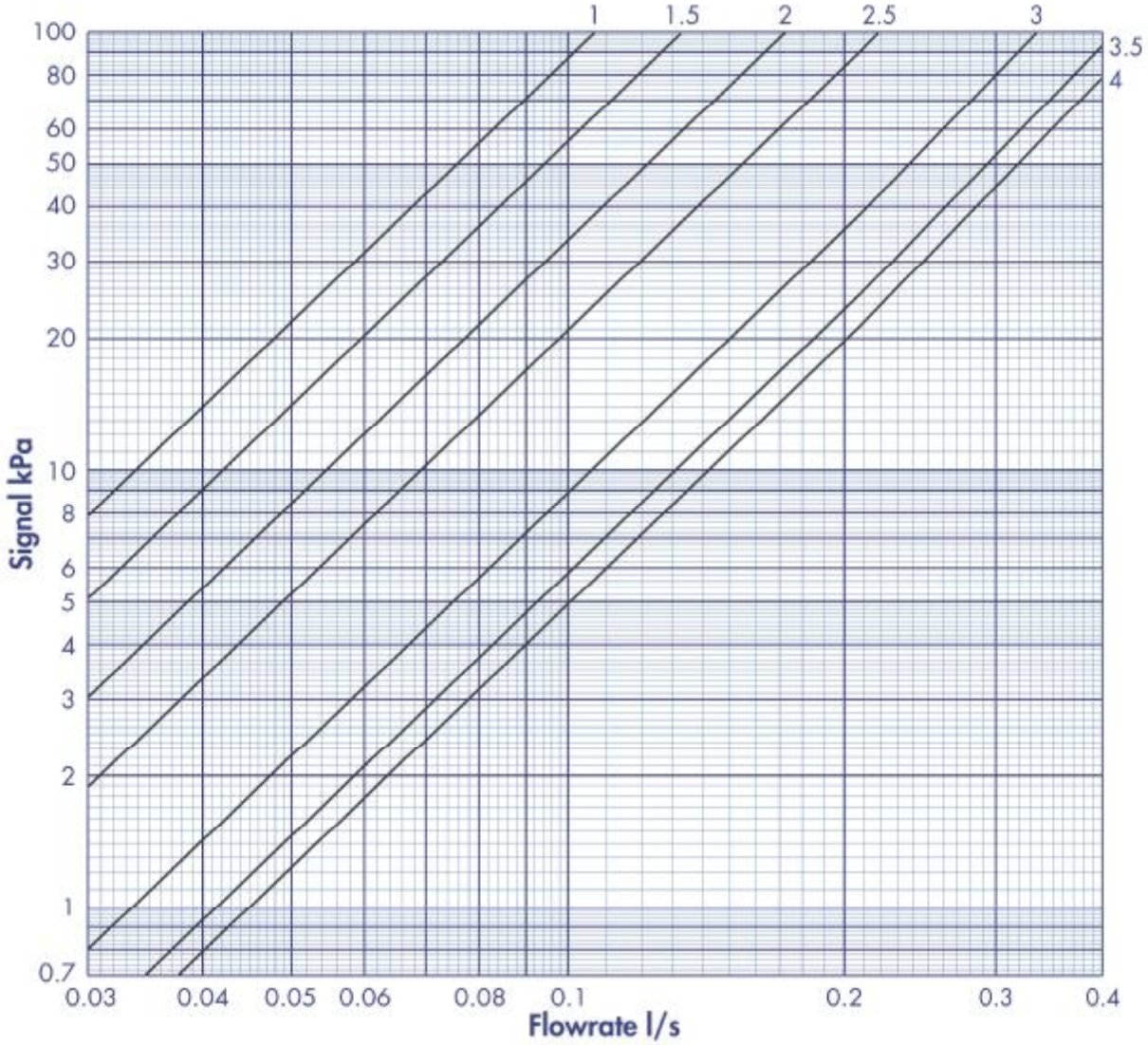

Position	1	1.5	2	2.5	3	3.5	4
Kv	0.39	0.48	0.62	0.79	1.21	1.49	1.62

Pressure Loss / Flowrate

Chart used to determine pressure loss from flowrate and position open

$$Q = \frac{K_v \sqrt{\Delta p}}{36}$$

Where

Q = Flowrate l/s

Δp = Signal kPa

Kv = Pressure Loss Co-efficient

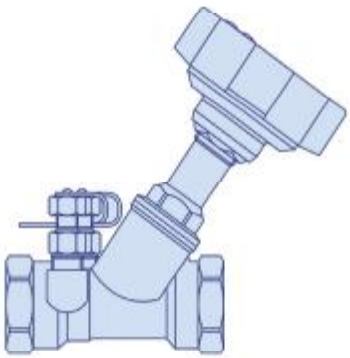

NIBCO
AHEAD OF THE FLOW®

¾″ Fixed Orifice Double Regulating Valve

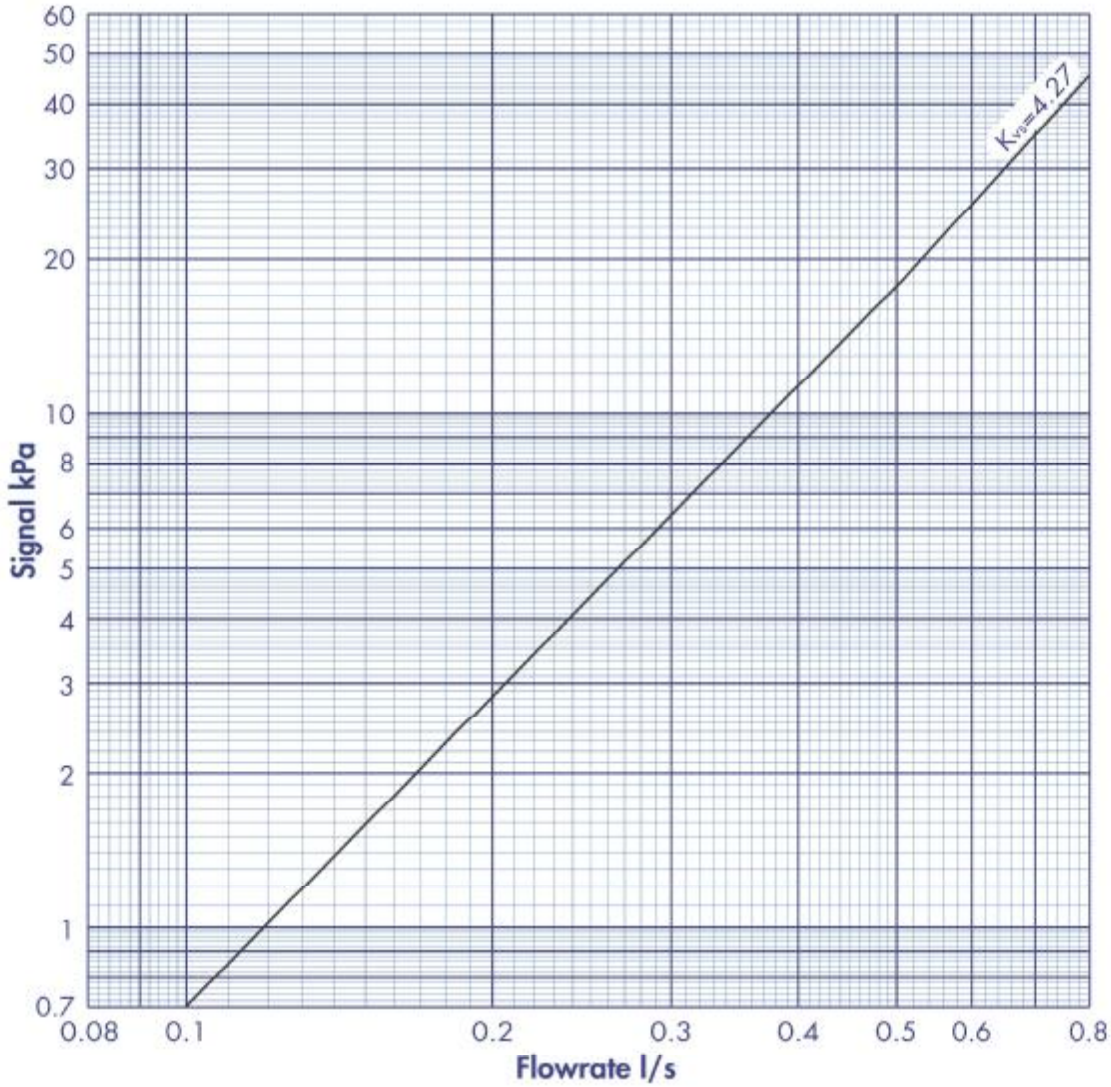

Signal / Flowrate

Chart used to determine flowrate from signal measured across orifice

$$Q = \frac{K_{vs}\sqrt{\Delta p}}{36}$$

Where

Q	= Flowrate	l/s
Δp	= Signal	kPa
K_{vs}	= Signal Co-efficient	

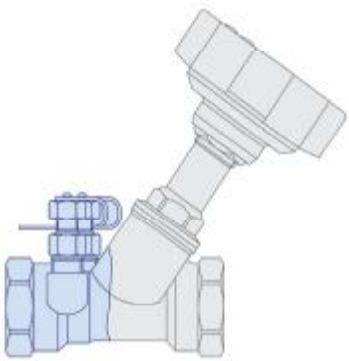

NIBCO
AHEAD OF THE FLOW®

¾″ Fixed Orifice Double Regulating Valve

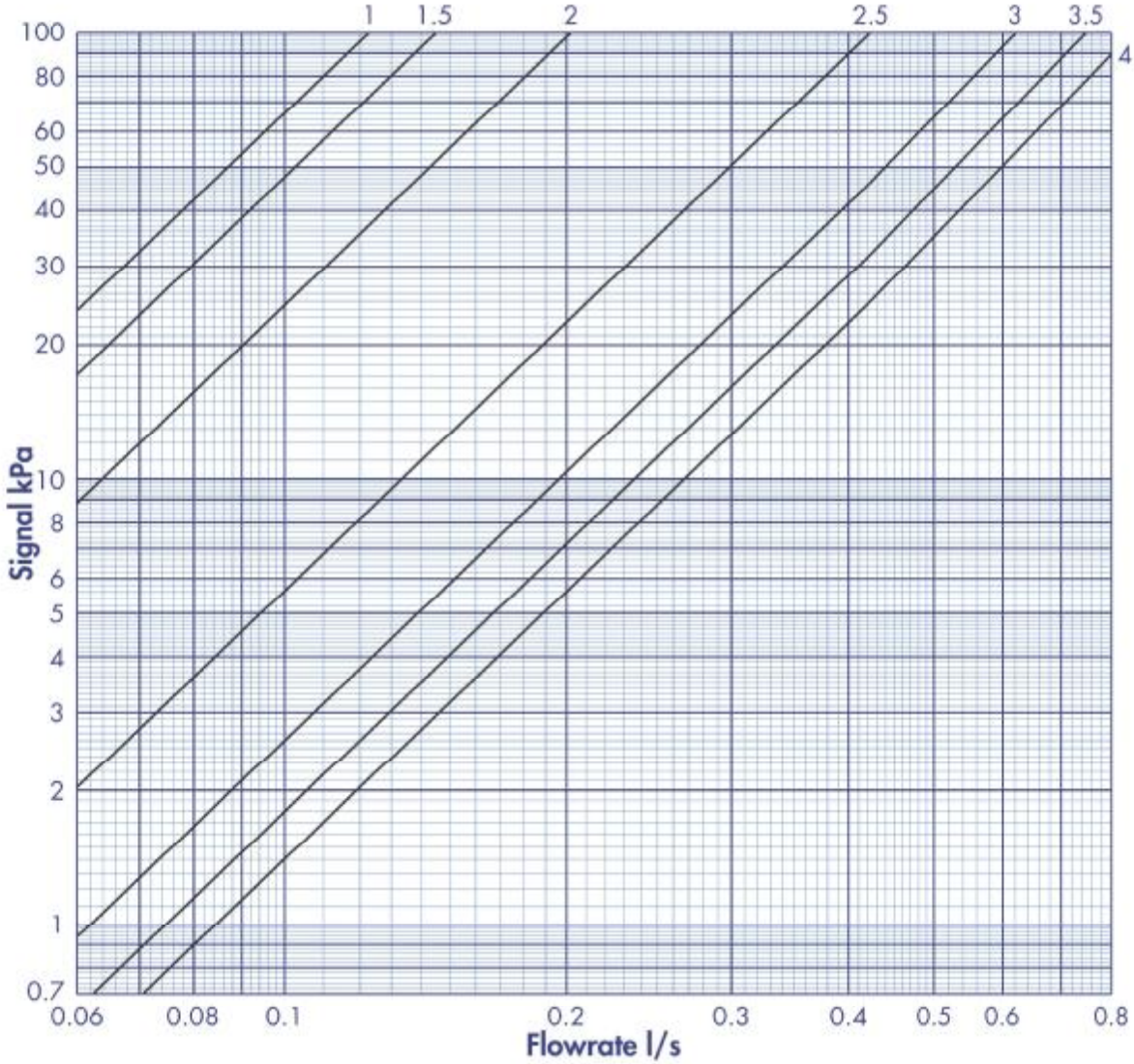

Position	1	1.5	2	2.5	3	3.5	4
Kv	0.44	0.52	0.73	1.52	2.24	2.69	3.04

Pressure Loss / Flowrate

Chart used to determine pressure loss from flowrate and position open

$$Q = \frac{K_v \sqrt{\Delta p}}{36}$$

Where

Q = Flowrate l/s

Δp = Signal kPa

Kv = Pressure Loss Co-efficient

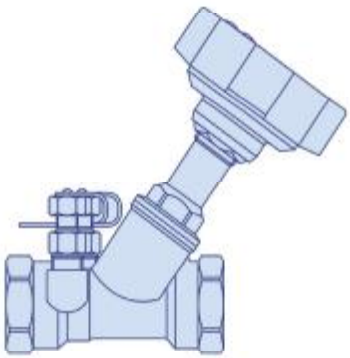

NIBCO
AHEAD OF THE FLOW®

1″ Fixed Orifice Double Regulating Valve

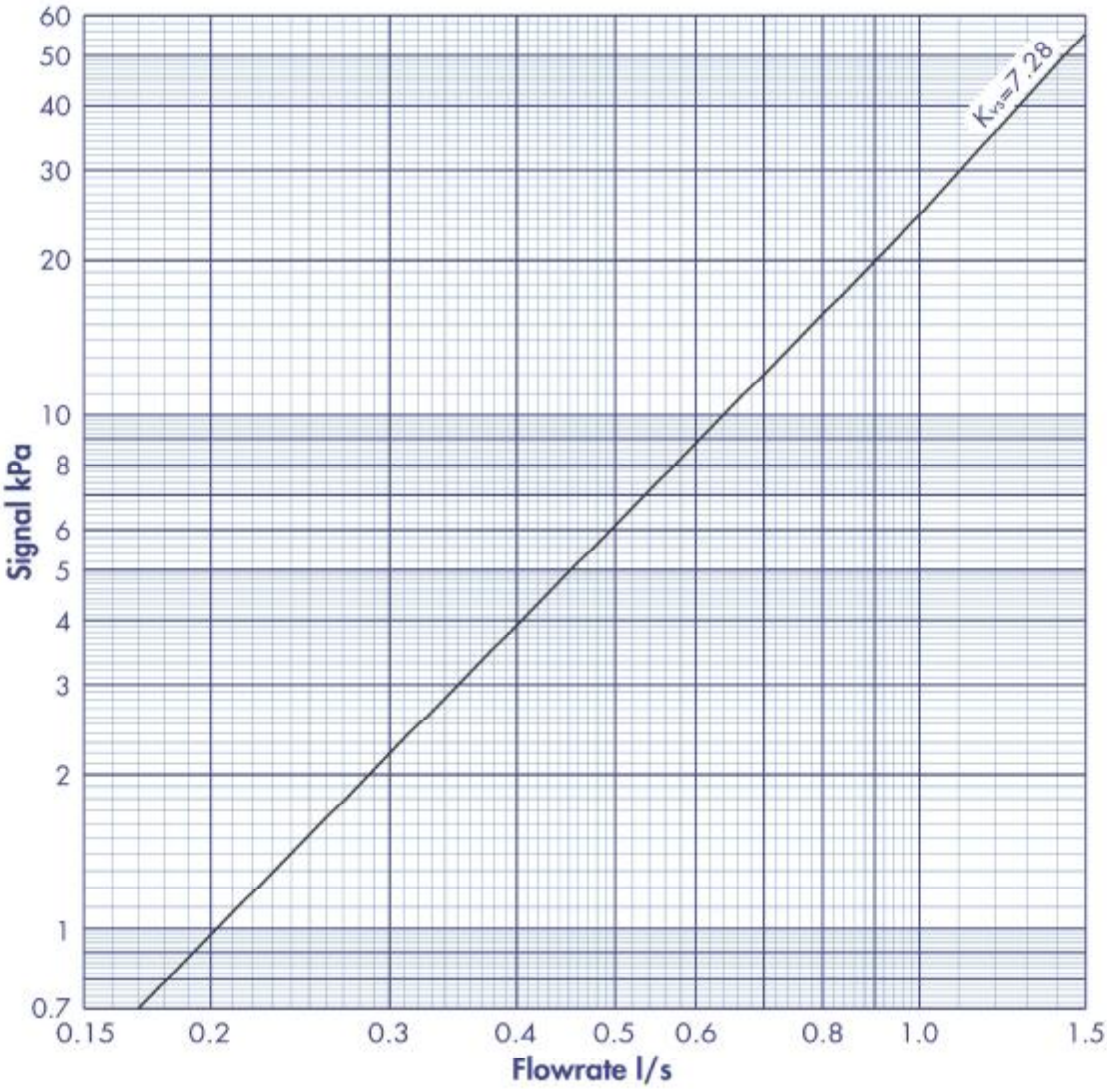

Signal / Flowrate

Chart used to determine flowrate from signal measured across orifice

$$Q = \frac{K_{vs}\sqrt{\Delta p}}{36}$$

Where

Q	= Flowrate	l/s
Δp	= Signal	kPa
K_{vs}	= Signal Co-efficient	

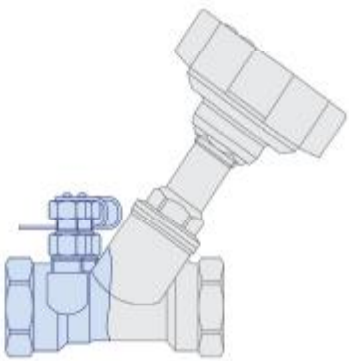

NIBCO
AHEAD OF THE FLOW®

1″ Fixed Orifice Double Regulating Valve

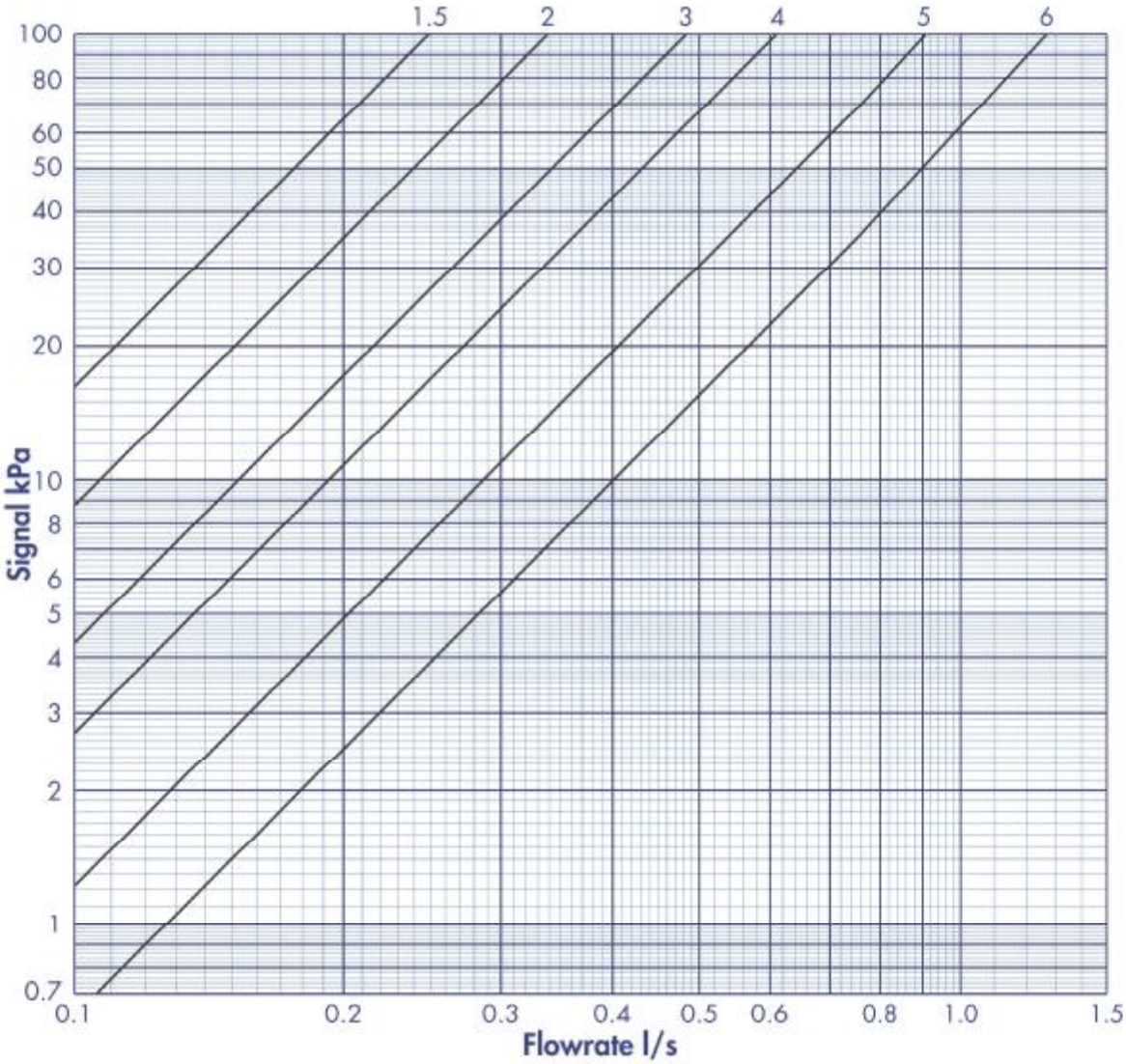

Position	1.5	2	3	4	5	6
Kv	0.90	1.22	1.74	2.19	3.28	4.58

Pressure Loss / Flowrate

Chart used to determine pressure loss from flowrate and position open

$$Q = \frac{K_v \sqrt{\Delta p}}{36}$$

Where

Q = Flowrate l/s

Δp = Signal kPa

Kv = Pressure Loss Co-efficient

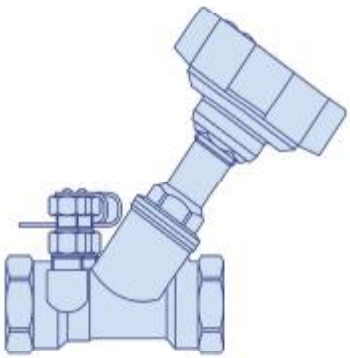

NIBCO
AHEAD OF THE FLOW®

1¼" Fixed Orifice Double Regulating Valve

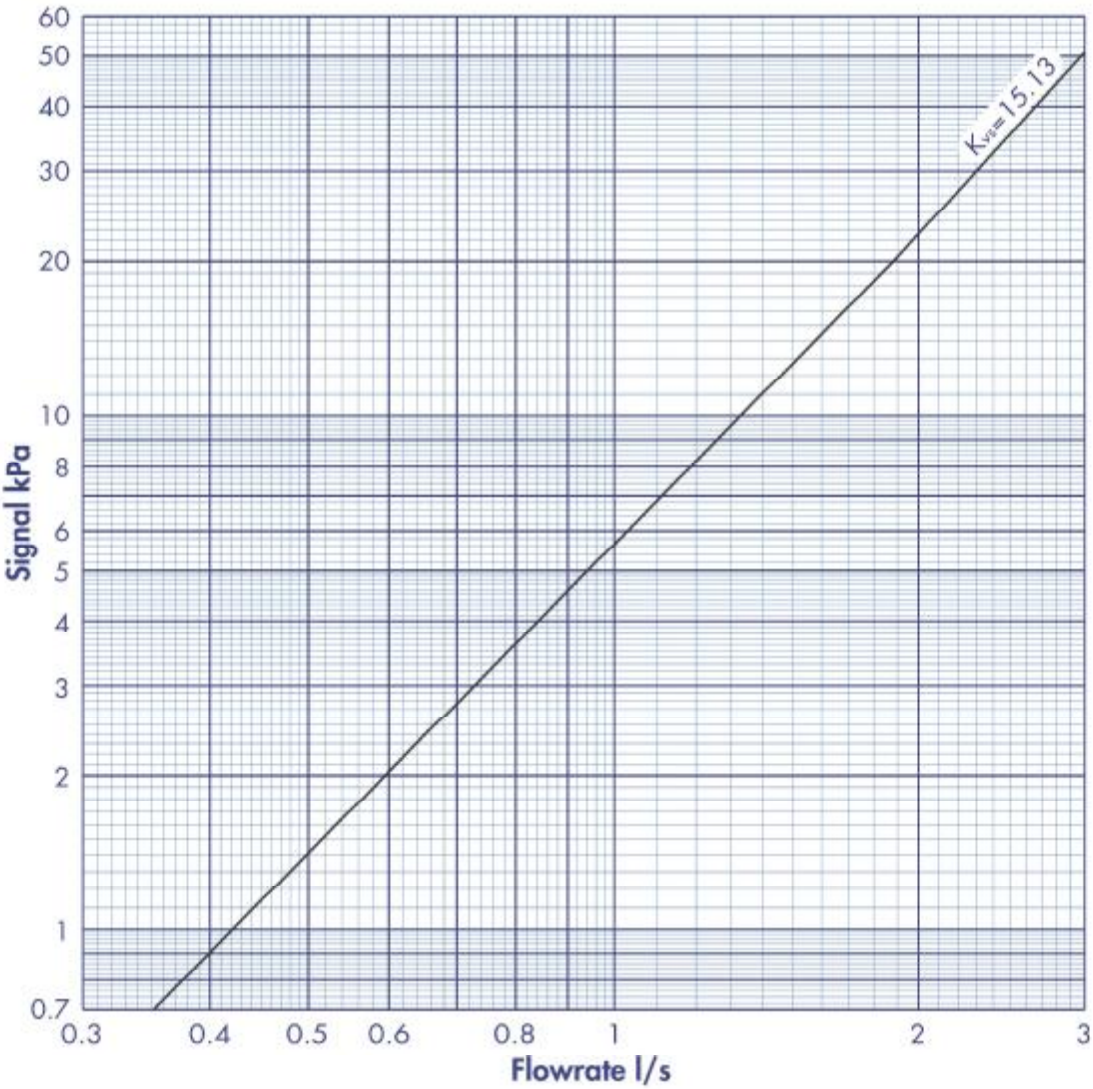

Signal / Flowrate

Chart used to determine flowrate from signal measured across orifice

$$Q = \frac{K_{vs}\sqrt{\Delta p}}{36}$$

Where

Q	= Flowrate	l/s
Δp	= Signal	kPa
K_{vs}	= Signal Co-efficient	

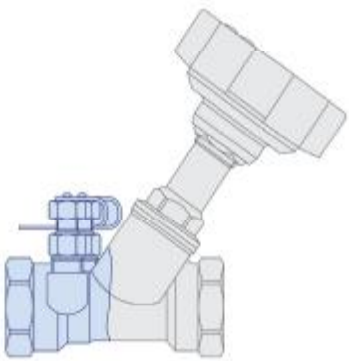

NIBCO
AHEAD OF THE FLOW®

1¼" Fixed Orifice Double Regulating Valve

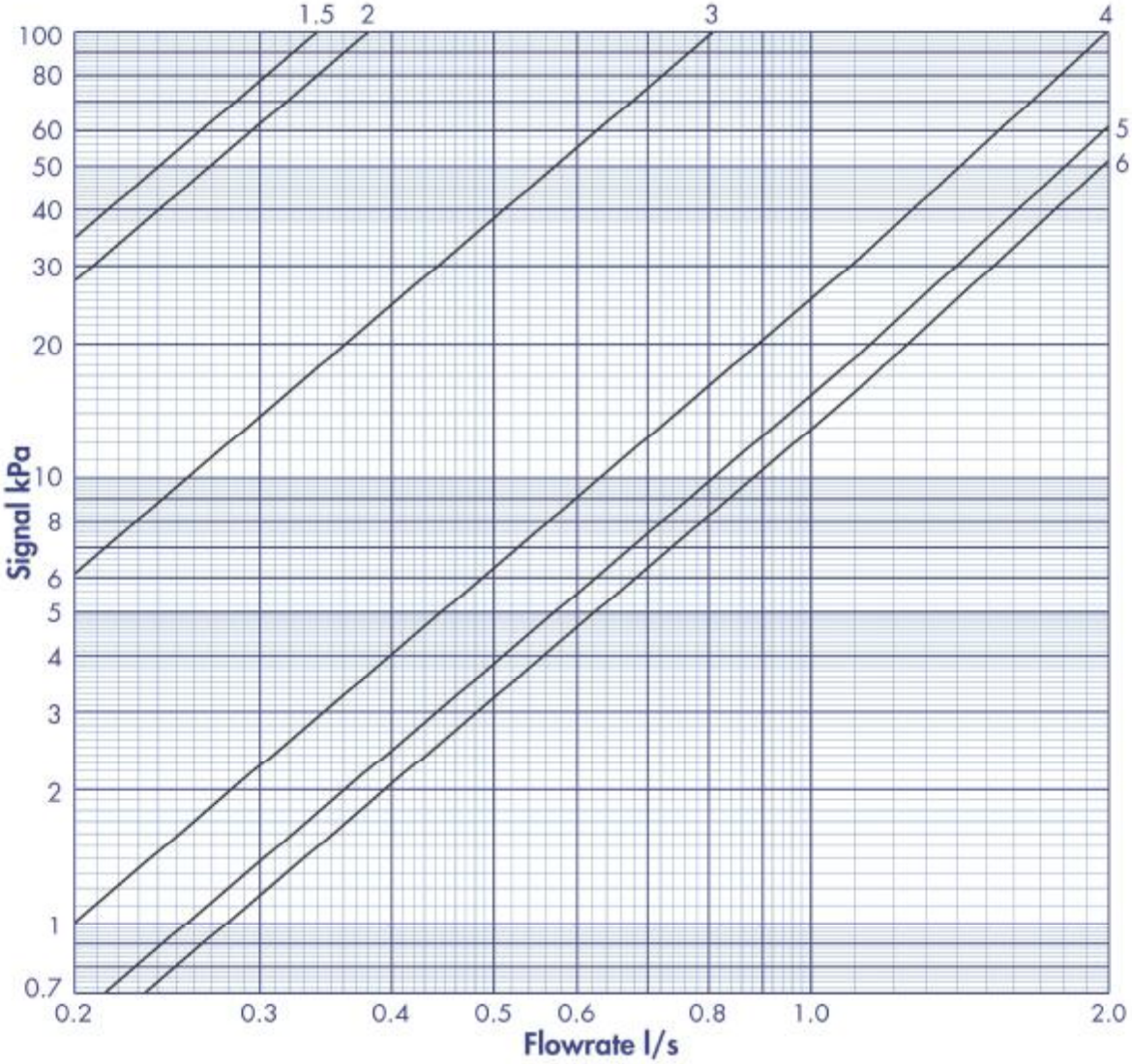

Position	1.5	2	3	4	5	6
Kv	1.23	1.37	2.91	7.16	9.18	10.02

Pressure Loss / Flowrate

Chart used to determine pressure loss from flowrate and position open

$$Q = \frac{K_v \sqrt{\Delta p}}{36}$$

Where

Q = Flowrate l/s

Δp = Signal kPa

Kv = Pressure Loss Co-efficient

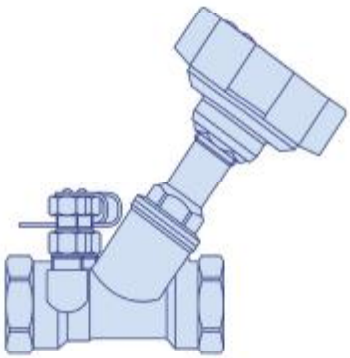

NIBCO
AHEAD OF THE FLOW®

1½" Fixed Orifice Double Regulating Valve

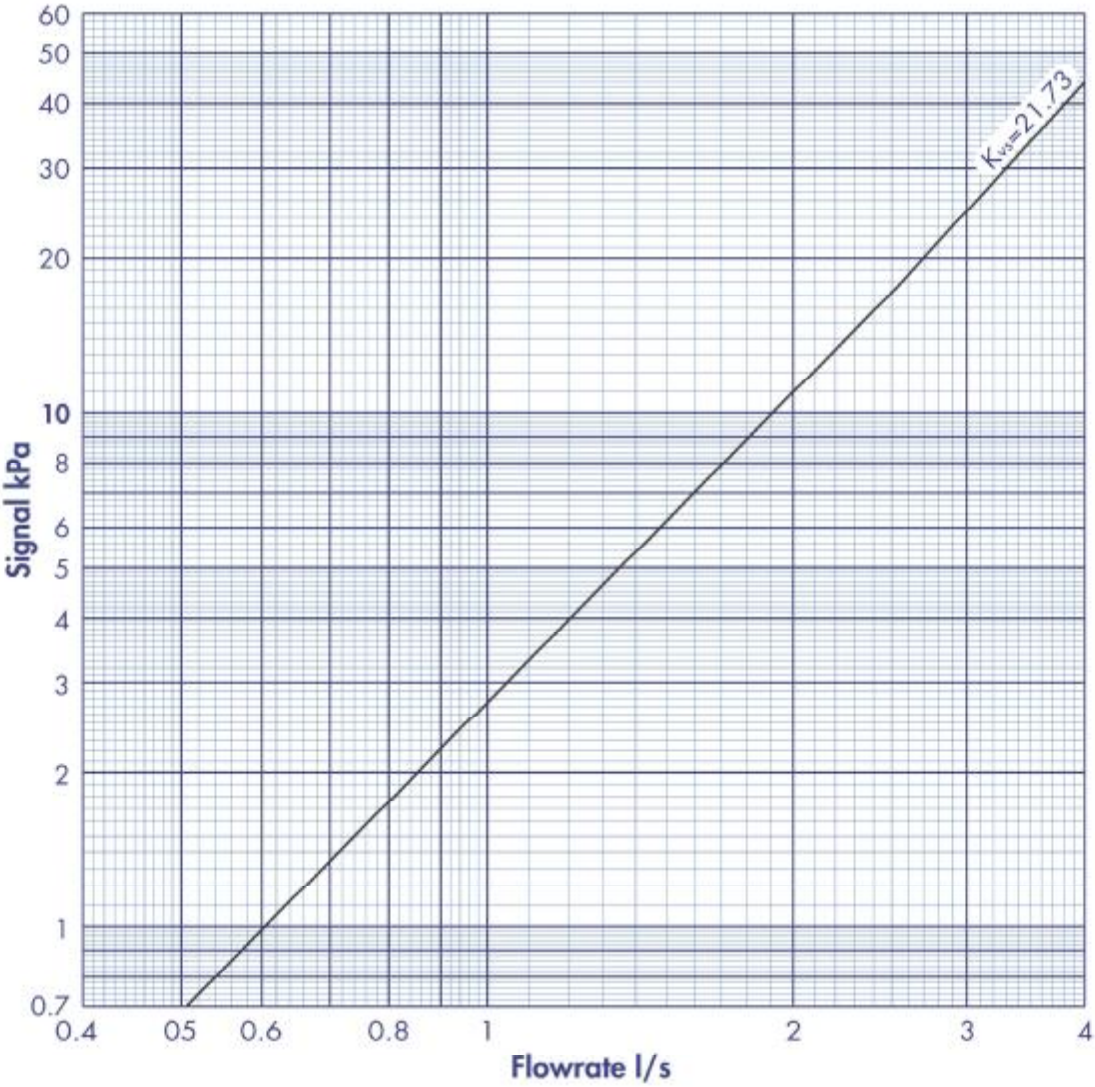

Signal / Flowrate

Chart used to determine flowrate from signal measured across orifice

$$Q = \frac{K_{vs}\sqrt{\Delta p}}{36}$$

Where

Q	= Flowrate	l/s
Δp	= Signal	kPa
K_{vs}	= Signal Co-efficient	

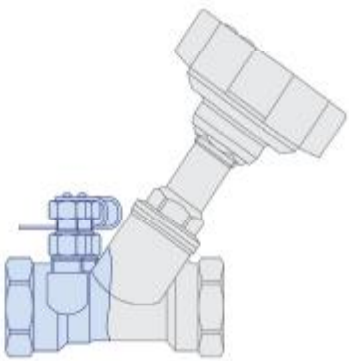

NIBCO
AHEAD OF THE FLOW®

1½" Fixed Orifice Double Regulating Valve

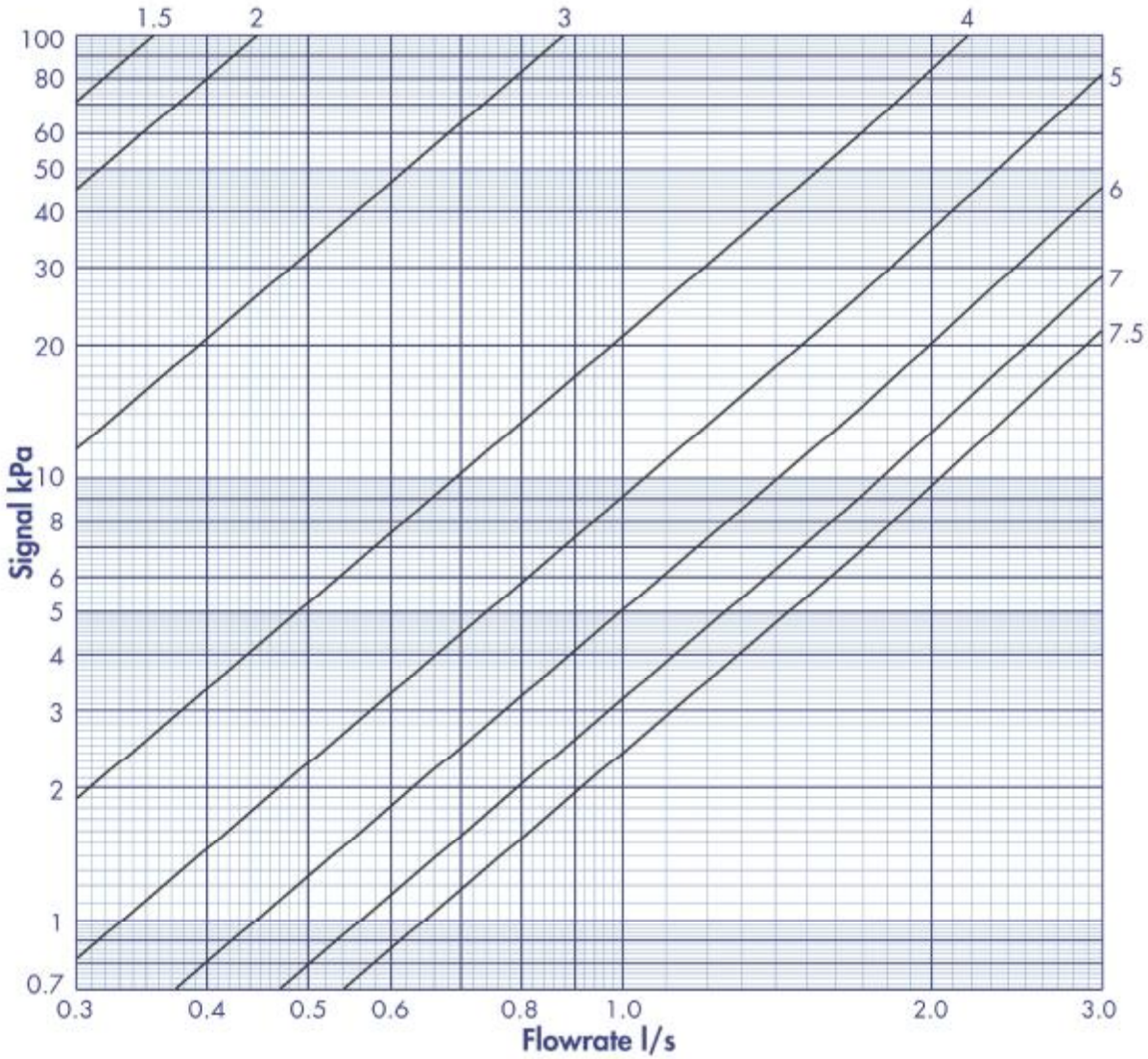

Position	1.5	2	3	4	4	6	7	7.5
Kv	1.29	1.61	3.16	7.86	11.95	16.01	20.21	23.26

Pressure Loss / Flowrate

Chart used to determine pressure loss from flowrate and position open

$$Q = \frac{K_v \sqrt{\Delta p}}{36}$$

Where

Q = Flowrate l/s

Δp = Signal kPa

Kv = Pressure Loss Co-efficient

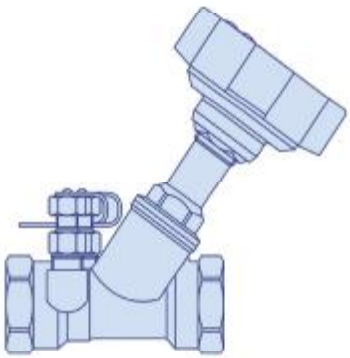

NIBCO
AHEAD OF THE FLOW®

2″ Fixed Orifice Double Regulating Valve

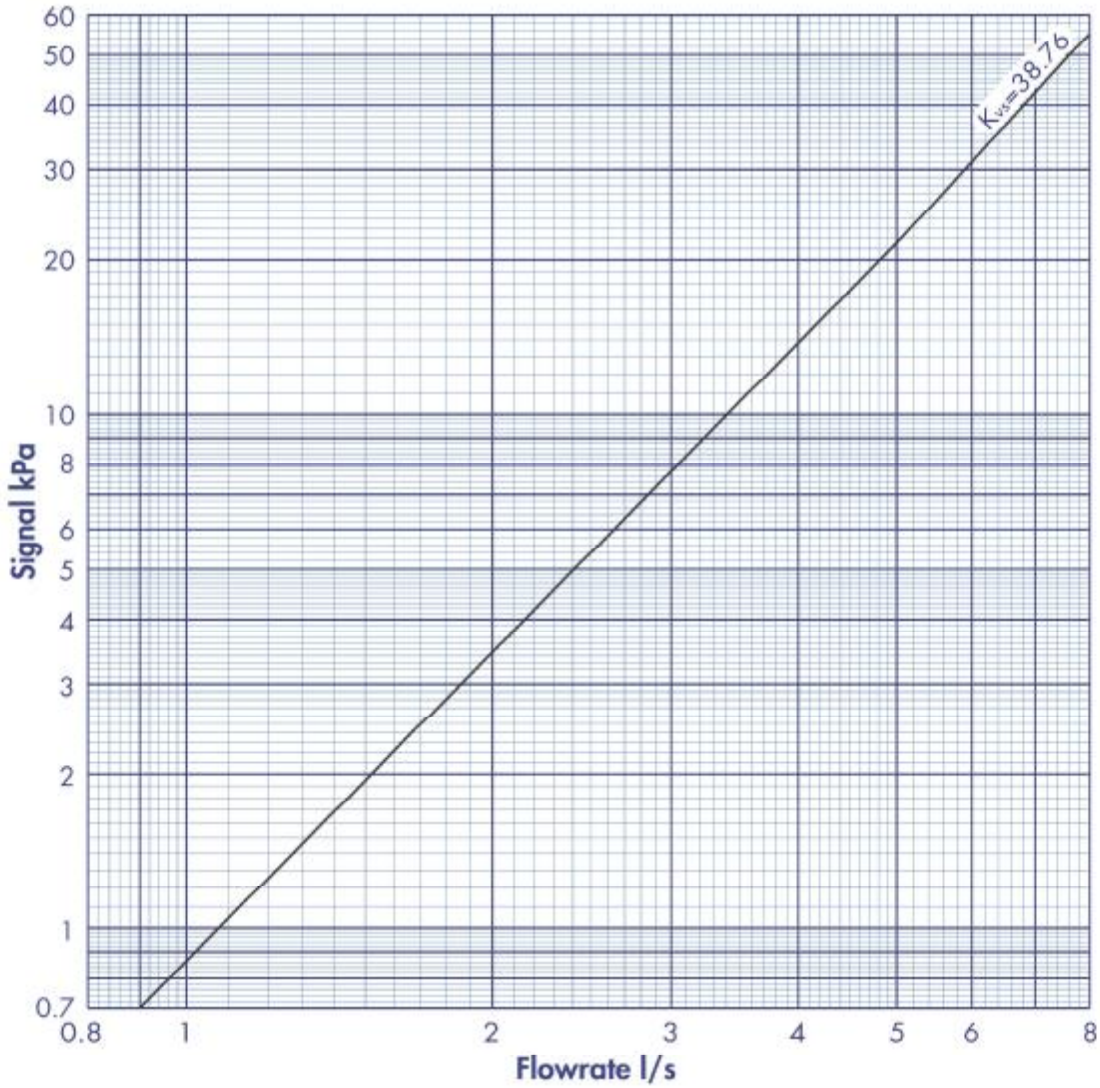

Signal / Flowrate

Chart used to determine flowrate from signal measured across orifice

$$Q = \frac{K_{vs}\sqrt{\Delta p}}{36}$$

Where

Q	= Flowrate	l/s
Δp	= Signal	kPa
K_{vs}	= Signal Co-efficient	

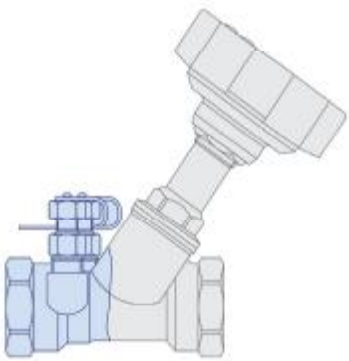

NIBCO
AHEAD OF THE FLOW®

2″ Fixed Orifice Double Regulating Valve

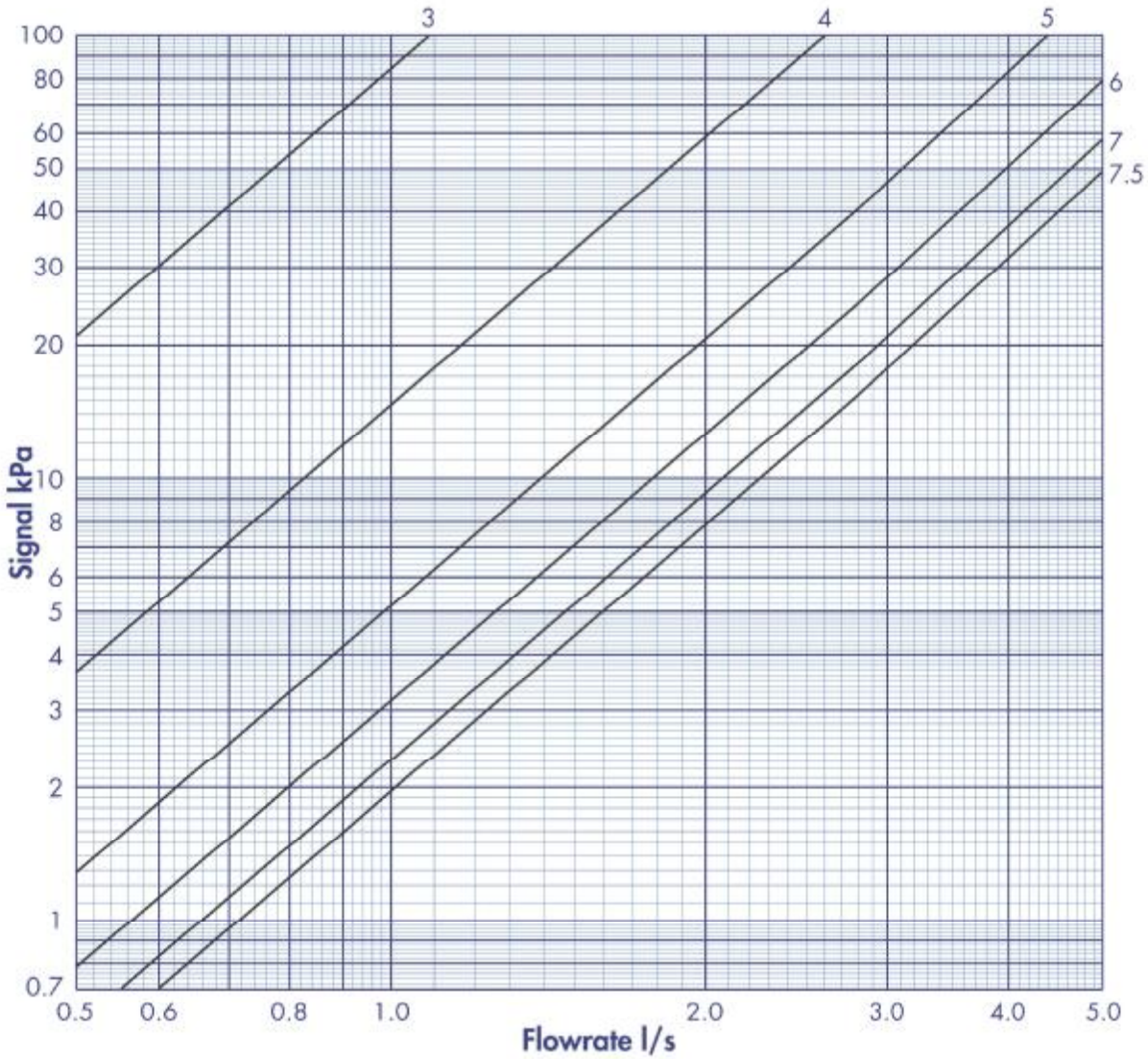

Position	1.5	2	3	4	4	6	7	7.5
Kv	1.33	1.80	3.94	9.41	15.82	20.25	23.61	25.67

Pressure Loss / Flowrate

Chart used to determine pressure loss from flowrate and position open

$$Q = \frac{K_v \sqrt{\Delta p}}{36}$$

Where

Q = Flowrate l/s

Δp = Signal kPa

Kv = Pressure Loss Co-efficient